REG	STATE	PROJECT	SHEET NO.	TOTAL SHEETS

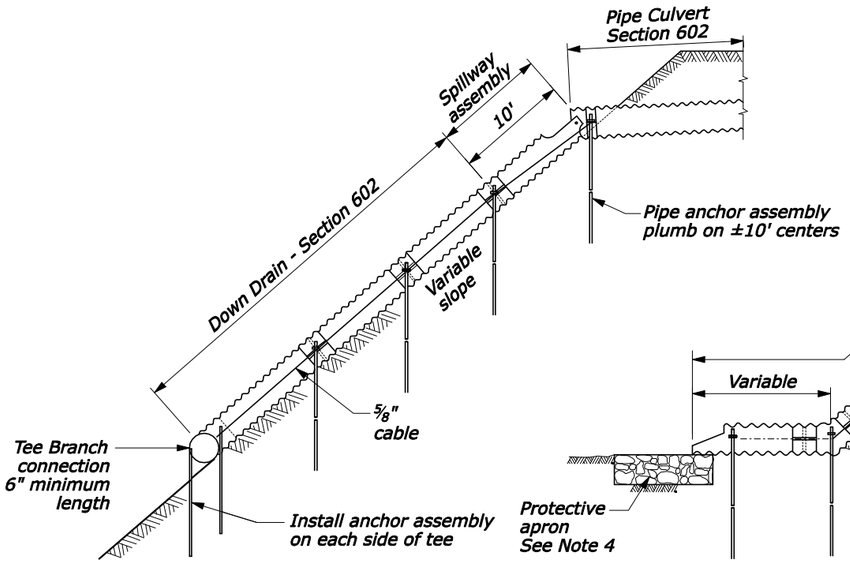

ELEVATION

SPILLWAY ASSEMBLY WITH DOWN DRAIN OUTLET ON NON-ERODIBLE MATERIAL

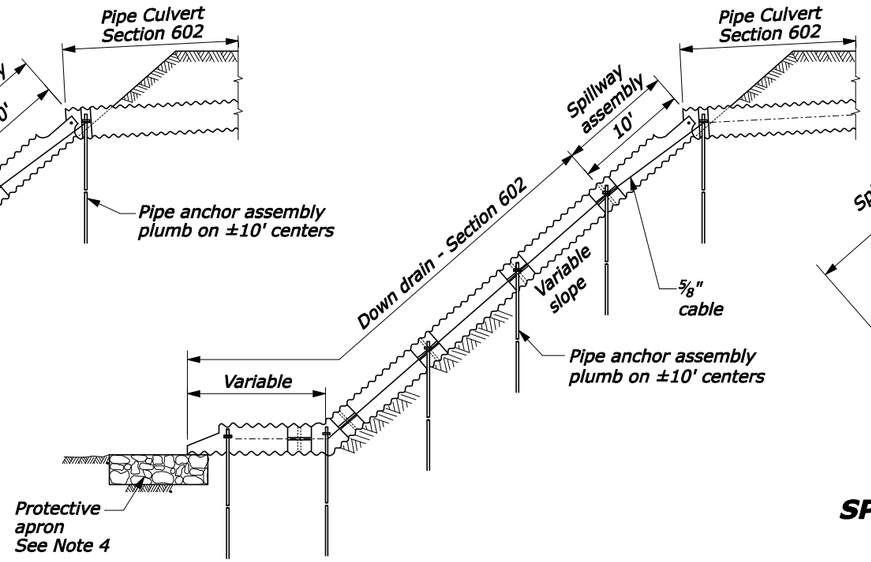

ELEVATION

SPILLWAY ASSEMBLY WITH DOWN DRAIN OUTLET ON ERODIBLE MATERIAL

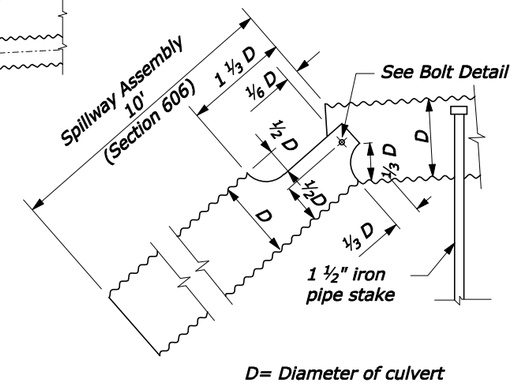

SPILLWAY ASSEMBLY

NOTE:

1. Fabricate spillway assembly from annular corrugated pipe, or from helically corrugated pipe with factory annular or reformed ends. Use 16 gage galvanized steel or 16 gage aluminum.
2. Make all banded connections watertight by placing 1/4" bead of approved caulking under each half of the band before tightening.
3. Payment for Tee Branch connection under Section 602 is included in the linear foot measurement for culvert pipe for the applicable sizes. Measure Tee Branch connections along the top of the Tee.
4. Furnish riprap conforming to Section 251 for protective apron. See Detail C 251-50.
5. Galvanize all items of anchor assembly after fabrication.
6. Furnish hardware in the imperial sizes shown. Equivalent metric sizes may be used when imperial sizes are not available.
7. Alternate designs may be used with approval of the CO.

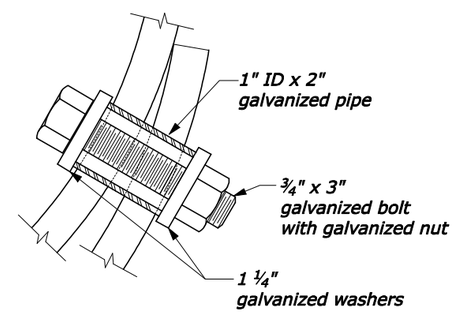

BOLT DETAIL

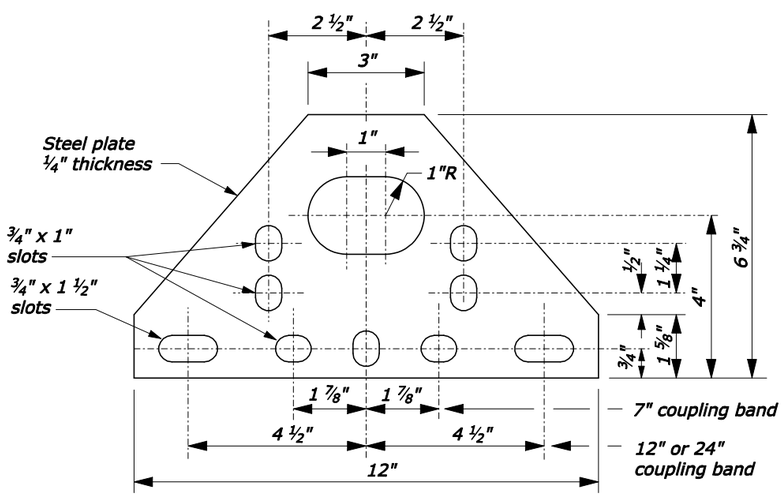

Measure length of coupling band parallel to the centerline of the pipe.

STEEL PLATE

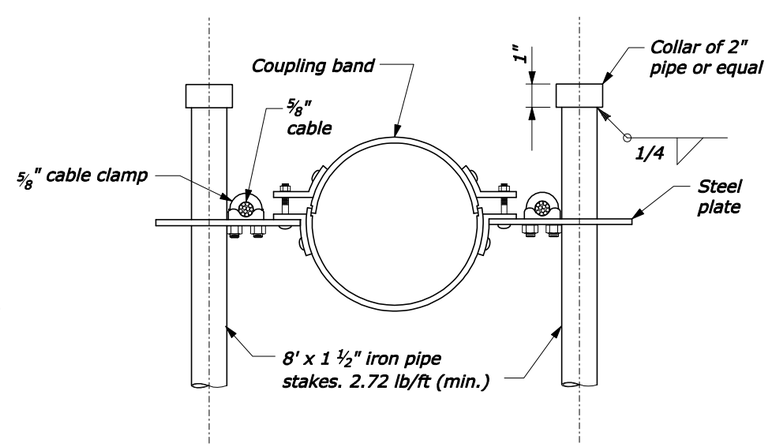

ANCHOR ASSEMBLY

NO SCALE

U.S. DEPARTMENT OF TRANSPORTATION
FEDERAL HIGHWAY ADMINISTRATION
CENTRAL FEDERAL LANDS HIGHWAY DIVISION

U.S. CUSTOMARY DETAIL

CMP SPILLWAY ASSEMBLY WITH DOWN DRAIN

DETAIL APPROVED FOR USE 07/2004

REVISED: 08/2006

DETAIL C606-50

4/23/2009 1:59:46 PM N:\CFL-DPIT\Black\Drawings In Progress\C606-50.dgn

REG	STATE	PROJECT	SHEET NO.	TOTAL SHEETS

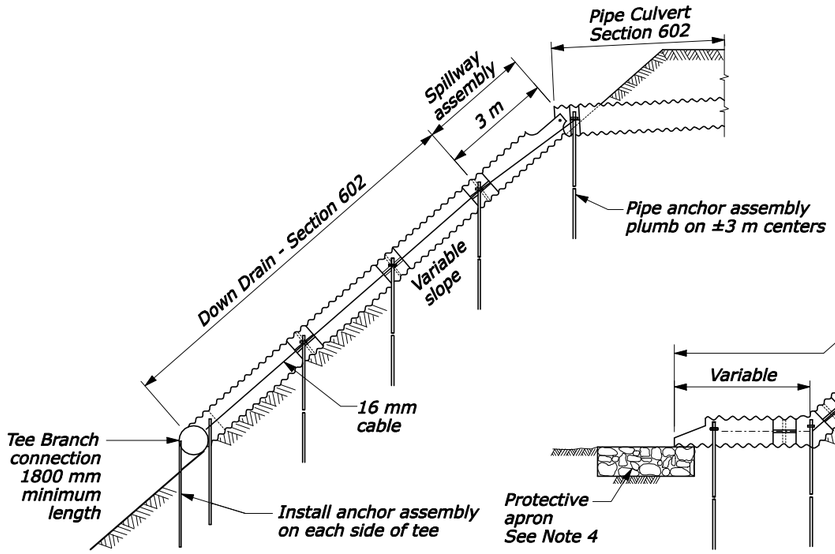

ELEVATION

SPILLWAY ASSEMBLY WITH DOWN DRAIN OUTLET ON NON-ERODIBLE MATERIAL

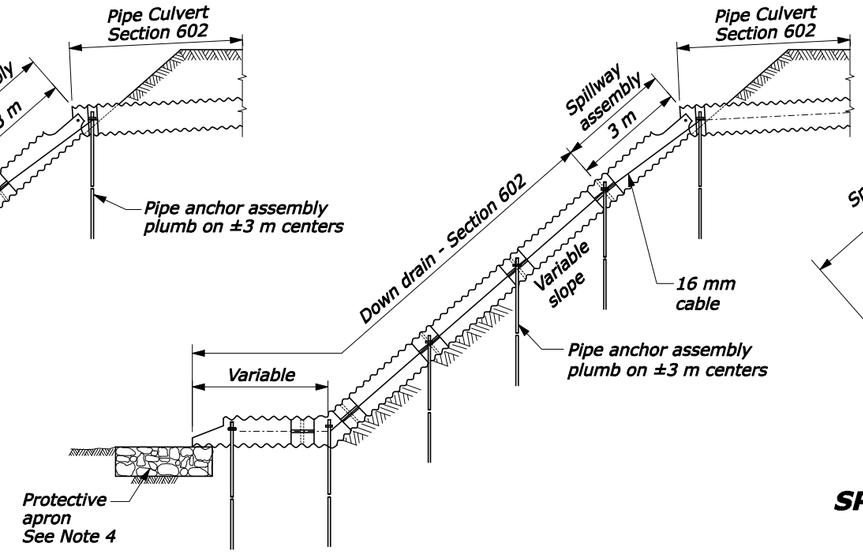

ELEVATION

SPILLWAY ASSEMBLY WITH DOWN DRAIN OUTLET ON ERODIBLE MATERIAL

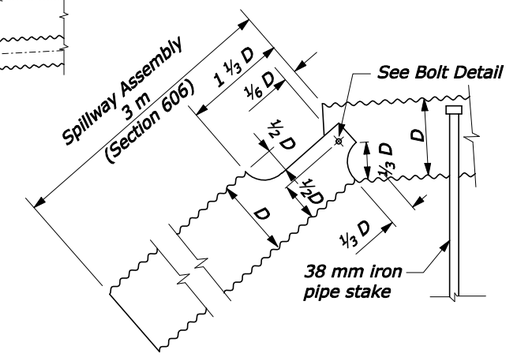

D= Diameter of culvert

SPILLWAY ASSEMBLY

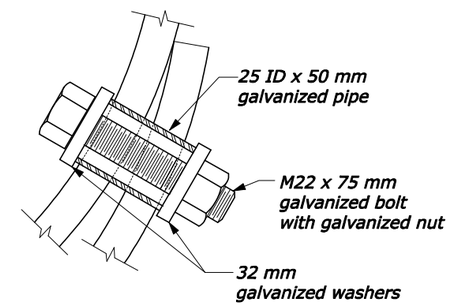

BOLT DETAIL

NOTE:

1. Fabricate spillway assembly from annular corrugated pipe, or from helically corrugated pipe with factory annular or reformed ends. Use 1.6 mm galvanized steel or 1.5 mm aluminum.
2. Make all banded connections watertight by placing 5 mm bead of approved caulking under each half of the band before tightening.
3. Payment for Tee Branch connection under Section 602 is included in the linear meter measurement for culvert pipe for the applicable sizes. Measure Tee Branch connections along the top of the Tee.
4. Furhish riprap conforming to Section 251 for protective apron. See Detail CM 251-50.
5. Galvanize all items of anchor assembly after fabrication.
6. Furnish hardware in the metric sizes shown. Equivalent imperial sizes may be used when metric sizes are not available.
7. Alternate designs may be used with approval of the CO.
8. Dimensions not labeled are in millimeters.

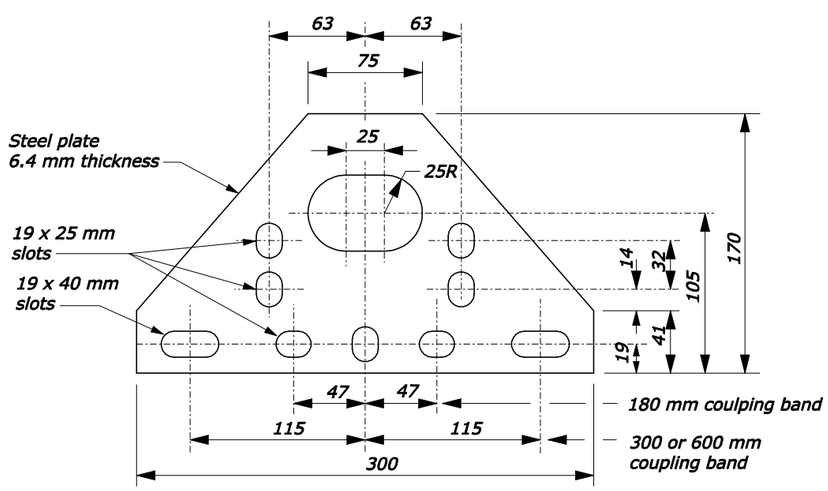

Measure length of coupling band parallel to the centerline of the pipe.

STEEL PLATE

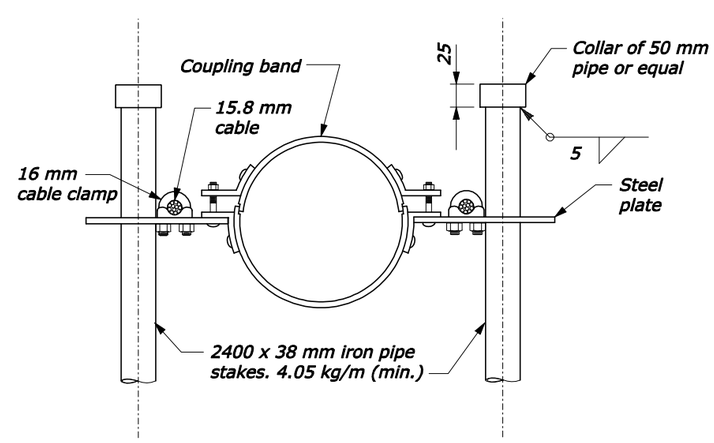

ANCHOR ASSEMBLY

NO SCALE

U.S. DEPARTMENT OF TRANSPORTATION
FEDERAL HIGHWAY ADMINISTRATION
CENTRAL FEDERAL LANDS HIGHWAY DIVISION

METRIC DETAIL

CMP SPILLWAY ASSEMBLY WITH DOWN DRAIN

DETAIL APPROVED FOR USE 07/2004
REVISED: 08/2006

DETAIL
CM606-50

8/8/2006 9:16:47 AM L:\DESIGN\AD2\CFL Details Team\Web Ready\C606-50.dgn