GUANELLA PASS ROAD
CO PFH 80-1(1), 1(2), 2(2), 2(3) & 2(4)

Route Assessment

Federal Highway Administration
Central Federal Lands Highway Division

Jacobs Engineering Group, Inc.

IDIQ Contract Number: DTFH68-04-D-00002
Task Order Number T-09-029
March, 2009

Table of Contents

Executive Summary ES-1

Section I., Introduction 1

Section II, Project Phasing and Current Conditions 5

Section III, Highway Design and Environmental Commitments 6

Section IV, Surfacing 12

Section V, Safety 20

Section VI, Fiscal Evaluation 22

Section VII, Closing 26

List of Figures

Figure ES-1, Vicinity Map ES-2

Figure ES-2, Constructed Macadam Surface ES-4

Figure ES-3, Constructed Asphalt Pavement Surface ES-4

Figure ES-4, Constructed Gravel Surface ES-5

Figure ES-5, Runoff from the Constructed Gravel Surface ES-5

Figure ES-6, Premature Macadam Surface Failure ES-6

Figure ES-7, Premature Macadam Surface Distress ES-6

Figure 1, Retaining Wall with Simulated Stone Face 7

Figure 2, Rockery Wall, Current Conditions 7

Figure 3, Rockery Wall Area after Construction 8

Figure 4, Steel Backed Timber Guardrail 8

Figure 5, Wildlife Crossing 9

Figure 6, Constructed Energy Dissipater Adjacent to Macadam Surfacing 10

Figure 7, Constructed Energy Dissipater Adjacent to Gravel Surfacing 10

Figure 8, Ditch along Constructed Asphalt Pavement Surfacing 11

Figure 9, Ditch along Constructed Gravel Surfacing.....11

Figure 10, Phase I Constructed Gravel Surface Showing Signs of Significant Washboarding.....13

Figure 11, Phase I Constructed Gravel Surface Showing Signs of Pothole Degradation.....14

Figure 12, Phase I Constructed Gravel Surface After Construction 14

Figure 13, Phase I Constructed Gravel Surface Showing Signs of Significant Rutting 15

Figure 14, Minor Washboarding and Rutting in Constructed Macadam Surface.....16

Figure 15, Isolated Potholes (Repaired) in the Constructed Macadam Surface 17

Figure 16, Isolated Potholes in the Constructed Macadam Surface 17

Figure 17, Isolated Shoving in the Constructed Macadam Surface.....18

Figure 18, Gravel Surface 19

Figure 19, Hardened Surface 19

List of Tables

Table 1, Capital Improvement Costs 24

Table 2, LCCA Results 25

Appendices

Appendix A, Typical Sections

Appendix B, Life Cycle Cost Analysis

EXECUTIVE SUMMARY

General. The Guanella Pass Route Assessment was performed to:

- Evaluate the effectiveness of the environmental commitments and work constructed to date under the National Environmental Policy Act (NEPA) transportation decision-making process
- Evaluate the performance of roadway elements in the constructed portion of the route
- Evaluate the sustainability of project elements for the route
- Provide recommendations for any necessary modifications to the constructed and proposed route improvements

The results of the assessment indicate that the environmental commitments made during the NEPA process were a sincere attempt to balance the following goals:

- Meet the visions and needs of the local communities and governing bodies
- Uphold the missions and guiding principles of the cooperating Federal and State agencies
- Provide a roadway that meets the expectations of the traveling public
- Deliver a transportation facility that is fiscally responsible from a capital improvement and maintenance standpoint

The Guanella Pass Road (FH 80) is located in the Pike and Arapaho National Forests. The route begins in Grant, Colorado at the intersection of U.S. 285 and ends in southwest corner of the historic district of Georgetown, Colorado. The total route length is approximately 23.6 miles. Mileposts (MP) run from south to north. The route is located in mountainous, high alpine terrain traversing Guanella Pass. Many lakes and streams are directly adjacent to the roadway. Access to numerous recreation opportunities and some residences are provided from the route.

Implementation of the route improvements is currently being performed in three distinct phases. A location map is shown on the in Figure ES-1 on following page. Phase I is approximately 8.8 miles long and is located in the center of the route. Phase I begins at approximately MP 9.3 (Station 16+000) and continues to approximately MP 17.0 (Lower Cabin Creek Reservoir). Phase II is approximately 5.5 miles long and is located at the northern end of the route. Phase II begins at MP 17.0 (Lower Cabin Creek Reservoir) and ends in Georgetown, Colorado. Phase III is located at the southern end of the route and is approximately 9.4 miles long. Phase III begins in Grant, Colorado and ends at approximately MP 9.3 (Station 16+000).

The current conditions at the time that this Route Assessment was developed are as follows:

- Phase I construction was completed in 2007
- Phase II construction is currently underway
- Phase III has been designed to approximately the 70 percent level

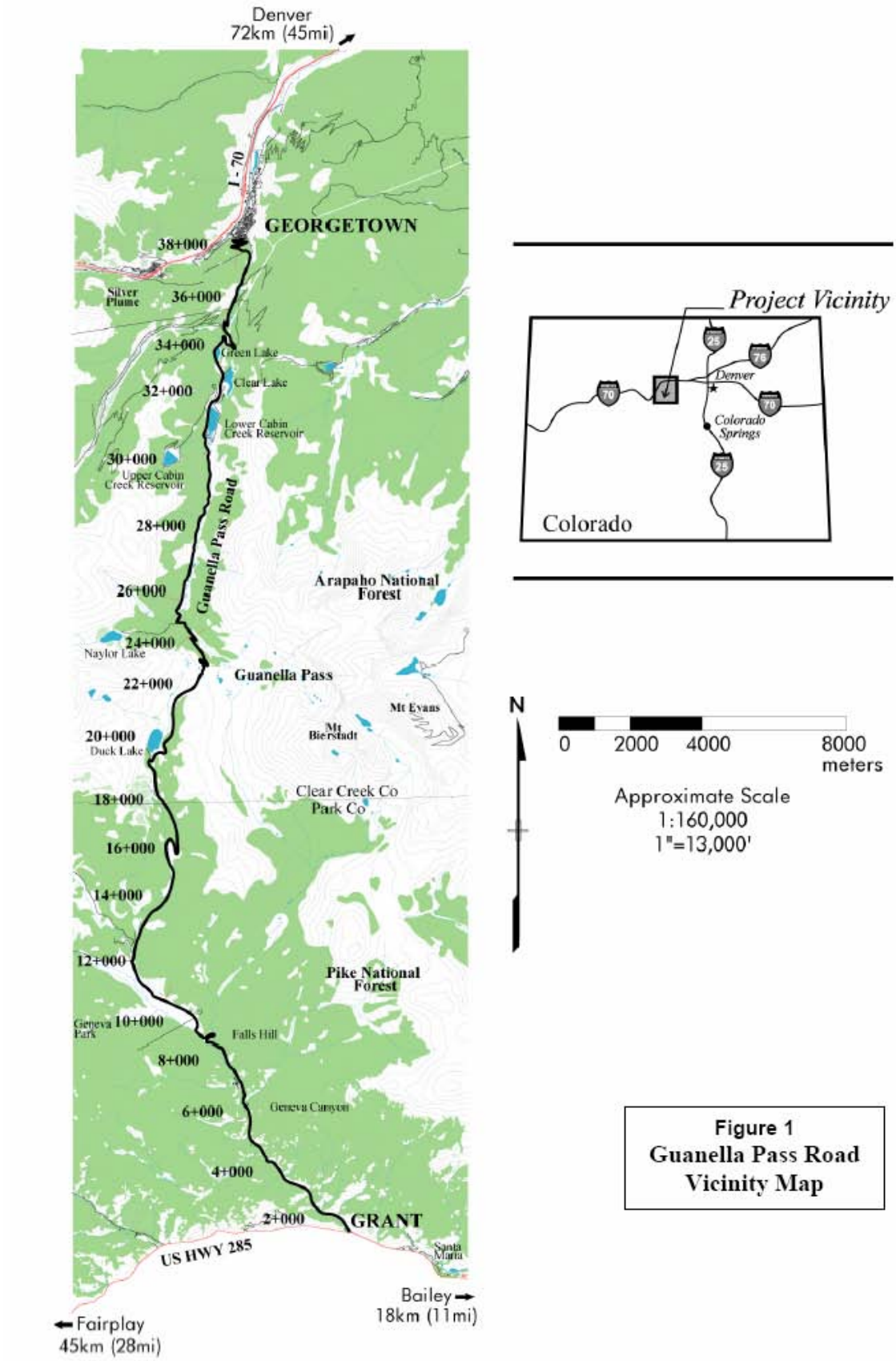

Figure ES-1. Vicinity Map

Environmental Commitments. Review of the route and associated design documents indicates that the route improvements support and enhance one of the overarching objectives of the project – to provide a rural, rustic and scenic roadway. Roadway design standards such as lane/shoulder widths and curve radii, combined with the selection of appropriate roadside features such as aesthetically pleasing retaining walls, rustic guardrail, rounding and warping of roadside slopes and a successful revegetation program have all worked together to create a constructed roadway that would appear to exceed the expectations of an average roadway user.

However, during the NEPA process a strong contingent of individuals and groups felt strongly that the roadway remain unchanged as much as possible. For maintenance, mobility and water quality reasons the Federal Highway Administration (FHWA) desired to construct an asphalt pavement surface over the entire route. A compromise was developed as a result of these two competing goals. The compromise consisted of constructing new asphalt pavement in areas that were originally paved and constructing either gravel or a macadam surface in areas that originally had a gravel or native material surface. Prior to the planned improvements approximately 48 percent of the original roadway had an asphalt pavement surface. The remaining 52 percent consisted of a gravel surface. Typical Section drawings of the three proposed surfaces are shown in Appendix A.

The proposed macadam surfacing consists of two layers of aggregate base (the top layer being treated with cement to improve stability) and two overlaying layers of chip seal surfacing. A chip seal roadway surface consists of uniform sized rock particles embedded in asphalt cement. The asphalt cement is placed in a single layer. A single layer of chips (rock particles) is then placed on top of the asphalt cement. The asphalt cement binds the chips to the roadway and serves to protect the roadway from water intrusion. The chips protect the asphalt layer from damage and provide skid resistance. The bottom layer of chip seal constructed on Guanella Pass utilized large (approximately 1 in.) chips. The top layer of chip seal surfacing of the macadam section used small (approximately 3/8 in.) chips.

Construction of the macadam surface significantly helped reduce the perception of an improved roadway surface. This is primarily because the macadam surface is much lighter in color than a standard asphalt pavement and therefore complements and blends in with adjacent natural materials. Additionally, the smaller chips of the top layer of macadam provide improved skid resistance characteristics.

The unobtrusive visual benefits of the use of the macadam surface are apparent in the Figure ES-2. Figure ES-3 on the following page shows an area where asphalt pavement was constructed to provide a basis for comparison. The reduced visual impact of the macadam surface versus the asphalt pavement surface is notable. In addition, both Figures provide samples of some of the selected roadside attributes that advance the goal of providing a rural, rustic and scenic roadway.

Figure ES-2. Constructed Macadam Surface

Figure ES-3. Constructed Asphalt Pavement Surface

One of the primary objectives during the NEPA process included improving water quality. Approximately 52 percent of the original roadway had a gravel, or more appropriately, a native surface. In many locations the roadway is directly adjacent to streams and lakes (See Figure ES-2). The proximity between the road and the water bodies results in direct rainfall and snowmelt runoff from the roadway surface entering the adjacent streams.

This fact combined with a desire to reduce fugitive dust from the roadway was two of the driving forces behind FHWA's desire to upgrade the entire roadway to a hardened surface. Figure ES-4 below shows a segment of the route that was constructed with gravel surfacing.

Figure ES-4. Constructed Gravel Surface

Current Conditions. The constructed gravel sections are showing significant signs of rutting and erosion. In addition to the poor driving conditions and reduction in relative level of safety provided by the current gravel surface (Figure ES-4), the water quality objective identified in the NEPA process is not being realized based on site visit observations and as evidenced in Figure ES-5. In addition, the projected costs associated with maintaining the gravel surface is considerable (see Section VI). This is primarily due to the steep grades along the route and rapid snow melt in the fall and spring. The macadam surface treatment is also showing signs of accelerated deterioration due to climate and roadway grade.

Figure ES-5. Runoff from the Constructed Gravel Surface

Figure ES-6. Premature Macadam Surface Failure

Evidence of this is apparent in Figures ES-6 and ES-7. In some areas the macadam surface is showing signs of "shoving" (excessive movement). The location shown in Figure ES-6 is especially vulnerable due to the additional lateral (side) load placed on the surface due to vehicles making sharp turns. Figure ES-7 below is located on a steep section of the roadway. Close observation of the Figure indicates that washboarding and rutting are starting to show up in the surface.

Figure ES-7. Premature Macadam Surface Distress

Findings. The NEPA process that defined the current design and construction of the route improvements was thoughtfully performed and advanced to design and construction. However, the competing environmental commitments and constraints (namely: the desire to perpetuate the rural and rustic roadway character, water quality issues and roadway construction/maintenance realities) have created a project that has resulted in potential sustainability issues and long term fiscal investment risks.

One of the cardinal rules of highway design is to provide uniform conditions that reduce changes in driver expectations. The first step in this goal is to provide a uniform lane and shoulder width along the route. The route improvements have addressed this goal by providing a uniform roadway and roadside width; however the variation in roadway surfacing (gravel, macadam and pavement) does introduce changes to driver expectations. Further, the severe rutting directly reduces the relative level of safety along the route.

The second step is to remove or mitigate hazards such as obstacles and steep slopes adjacent to the roadside. This objective has also been addressed by the route improvements through the use of aesthetically pleasing steel backed timber guardrail and removal of obstructions that are directly adjacent to the roadway.

The third and less concrete goal is to provide a self regulating/self enforcing roadway that uses roadway width, curvature and grade to affect a positive behavioral perception in the driver. In other words, a normal driver will go slower when the lane width the driver is in is narrower. Similarly, the normal driver will go slower on a steep road with curves than they will on a flat and straight road. The route improvements have achieved this goal by virtue of maintaining the original alignment.

Key elements of a successfully completed route that all stakeholders can agree with include the following objectives:

- Provide a roadway capable of accommodating year 2025 traffic
- Improve safety
- Provide a route that can be used by the general public, the USFS, and local governing bodies that advance the visions of growth management plans as currently conceived
- Improve water quality, other environmental considerations and reduce maintenance impacts
- Maintain the rural and scenic character of the roadway and roadside

As indicated above, the macadam and gravel surfaces (combined with the numerous other aesthetically pleasing roadside attributes) promote the desired roadway character. However, the desired reduction in fugitive dust, direct impacts to water quality and heavy maintenance requirements need to be resolved prior to completion of route improvements. In short, a sustainable roadway surface that meets the above objectives needs to be considered.

The constructed macadam surface has proven to provide the rustic character and reduced speeds that are desirable. In addition the macadam surface has performed well with respect to improved

water quality, but continued premature degradation will eventually lead to erosion and sedimentation problems. However, the surface is showing signs of premature distress and is a maintenance liability. The constructed gravel surface is not performing well from any standpoint except perpetuation of a rustic roadway.

Industry standard costs and percentages for engineering and construction indicate that the route has been conceived and implemented using considerable effort to protect the environment. A Life Cycle Cost Analysis (LCCA) for the route that considers the current design and recommended changes indicates that approximately $2.0 million (in adjusted dollars) can be saved in maintenance and rehabilitation costs over a forty year period (with the analysis period starting in 2006) if the recommendations are implemented. Further, a $3.5 million increased initial outlay of capital improvement funds would result in a $6.9 million savings in total costs (in unadjusted dollars) over a forty year period.

Recommendations. Under the current Final Environmental Impact Statement (FEIS) and Record of Decision (ROD), approximately 56 percent of the route will be surfaced with asphalt pavement, 30 percent will be surfaced with macadam and 14 percent will be surfaced with gravel. It appears that all of the primary NEPA objectives (rustic character, water quality, maintain character) can be fully realized if the entire route was surfaced with asphalt pavement and a chip seal surface was applied to mitigate the visual effects. In fact, Phase III of the project includes a provision to chip seal the asphalt pavement in Phases I and II.

The desired scenic context of the roadway could still be realized. Water quality issues, reductions in variations in driver expectations, and reductions in long term maintenance costs and disruptions to users, and the environment would all be realized. The visual obtrusiveness of the black contrast of asphalt pavement has already been proven to be mitigatable using a chip seal surface based on observations of the constructed macadam. However, the water quality benefits of this recommended hardened surface have yet to be recognized along the entire route.

Project attributes including aesthetically pleasing retaining walls, rustic guardrail, rounding and warping of roadside slopes, effective management of rainfall and snowmelt runoff and a roadway that “fits” the vision of a rural, rustic and scenic roadway could still be achieved. The roadway surface could be stabilized and a chip seal application would reduce the visual obtrusiveness of the asphalt pavement. Maintenance obligations of Park and Clear Creek counties, as well and the USFS would be reduced. Finally, as originally conceived, water quality would be improved along the entire route.

It has been shown in actual field conditions that a chip seal application on top of asphalt pavement promote the rustic character that is desired and improves the water quality. Primary safety concerns and maintenance requirements could also be reduced. Existing rutting and washboarding of the gravel surface and similar longer term problems with the macadam surface would be eliminated and the overall relative level of safety would be improved.

SECTION I, INTRODUCTION

Overview. The scope of this Route Assessment is to review and evaluate the commitments made during the National Environmental Policy Act (NEPA) transportation decision-making process, the preliminary engineering documents and the physical construction improvements that have been constructed thus far.

The following documents have served as the primary basis for the documentation portion of review:

- Final Environmental Impact Statement (FEIS)
- Associated Regulatory Permits
- Record of Decision (ROD)
- Design Plans
- Specifications
- Mitigation Commitments

In addition, the following tasks were performed to assess the context, intensity and performance of the environmental commitments made versus recently constructed and currently proposed roadway and roadside features:

- Initial Site Visit
- Follow-Up Site Visit and Discussion with the Central Federal Lands Highway Division (CFLHD) project construction staff

The primary thrust of the Route Assessment includes a discussion, evaluation and independent assessment of the following:

- The level at which proposed and constructed roadway elements fulfill the environmental commitments made during the NEPA transportation decision-making process
- The anticipated long term physical performance of the three surfacing designs proposed and constructed on the route
- The contextual application, performance, relative level of safety and long term sustainability of highway design features proposed and constructed along the route
- The anticipated life cycle costs of the route as currently proposed or constructed in relation to the costs incurred for project development, construction and construction engineering

Based on the review, assessment and observations made above, the report concludes with:

- Observations on the overall success of implementing the environmental commitments made during the NEPA transportation decision-making process and any recommended revisions
- Observations on the overall success and sustainability of the surfacing within the context of the environmental commitments made during the NEPA transportation decision-making process and any recommended revisions
- Observations on the overall success of the roadway elements within the context of the environmental commitments made during the NEPA transportation decision-making process and any recommended revisions
- Observation on the relative level of safety of the route as designed and as influenced by any recommendations
- A summary of the initial and projected costs as influenced by any recommendations associated with the route

Project Phasing and Current Conditions. A brief section has been developed to orient the reader regarding the route location and setting, phasing of project implementation and the current status of the route improvements.

Highway Design and Environmental Commitments. The context of the major roadway attributes have been discussed in relation to the intended goals of the FEIS and ROD. In addition, the overall context of the proposed route has been evaluated against the environmental commitments made and the project objectives identified in the ROD. This component of the review and assessment provides an over-arching evaluation of the discussions. The intent of this section of the Route Assessment is to provide a holistic assessment of all objectives, environmental commitments, and safety and cost implications of proposed and recommended solutions associated with the Guanella Pass route improvement projects.

To accurately reflect the final disposition of environmental commitments, this Route Assessment includes observations of the intent and context of design features included in the plans and the implementation and performance of the features as actually constructed. Many commitments were made during the approximately 10 year development of the FEIS and ROD. This assessment has focused on the design and construction of permanent physical roadway features. Other commitments that are temporary or not directly attributable to permanent construction features (e.g., wildlife monitoring surveys, temporary mitigation requirements and interagency reporting requirements) were not assessed.

Select sections of the FEIS have been reviewed to obtain the appropriate background, context, intensity and physical constraints of the environmental commitments made during the NEPA transportation decision-making process. These sections or subsections included the:

- Summary Section
- Purpose and Need Section
- Portions of the Alternatives Section directly relating to the Preferred Alternative

- Portions of the Affected Environment and Environmental Consequences Section directly relating to the Preferred Alternative
- Mitigation Section
- Appendix C: Rationale for the Design Criteria and the Proposed Improvements for Alternative 6 (Preferred Alternative)

The ROD was reviewed in its entirety, as were the substantive portions of the permits provided by the CFLHD. Review of the information discussed above served as the background documentation for review and assessment of the Mitigation Commitments and the Plans and Specifications. Review and assessment of the Mitigation Commitments and the Plans and Specifications have been methodically performed and applicable line items of the Mitigation Commitments have been evaluated.

Site visits were conducted in October and November of 2008 to observe the existing and constructed condition of physical roadway attributes and discuss the influencing factors with the CFLHD project construction staff.

Roadway Surfacing. Three types of surfacing have been evaluated within this Route Assessment: gravel surfacing, macadam and asphalt pavement. Each of these three surfacing types has been constructed in the Phase I. Appendix A includes typical section drawings of the three surfacing types.

The gravel surfacing consists of approximately 17 inches of aggregate base course with a dust palliative application. The macadam surfacing consists of approximately 18 inches of aggregate base course (with the top 6 inches being treated with cement) and two layers of chip seal. The asphalt pavement surface includes 6 inches of aggregate base course overlain with 4 inches of asphalt pavement.

Safety. Any project designed and reconstructed has tradeoffs between mobility, safety, project costs and anticipated environmental impacts. The relative safety of one route reconstruction project may be markedly different from that of another route reconstruction project. One of the objectives of the Guanella Pass Route reconstruction is to provide “reasonable protection from unsafe conditions”. A primary component of this goal is to reduce changes in driver expectation, thereby reducing the number of “unknowns” that the driver encounters.

The relative level of safety of a given route must be established based on current conditions and proposed conditions after construction. Issues such as clear-zone (the roadside area beyond the traveled way that is free of obstructions), self regulating/self enforcing roadways (roadways that inherently reduce excessive speed and overdriving of the facility) and the contextual environment established by the existing or proposed roadway attributes influence the relative level of safety of a given roadway.

The Safety section of this Route Assessment attempts to distinguish the benefits of the proposed or recommended design features that mitigate crashes associated with an individual that overdrives the roadway conditions at the time of a crash.

Fiscal Analysis. Any fiscally constrained improvement project must consider initial project development costs, construction costs, user benefits and long term maintenance costs that sustain the quality of the infrastructure at an economic level well reduced from the initial investment. This Route Assessment evaluates project costs in two ways. First, overall costs (i.e., project development, construction and maintenance costs) have been estimated for the current project and recommended changes. Secondly, a Life Cycle Cost Analysis (LCCA) has been performed that strictly focuses on the roadway surfacing. A forty year observation period was used for the LCCA to ensure that yearly maintenance, periodic maintenance, and major reconstruction activities were considered.

Closing. The final section of this Route Assessment provides recommendations that strive to maintain the context and intensity of the proposed action and attempts to improve upon the original goals and objectives set forth in the NEPA transportation decision-making process.

SECTION II, PROJECT PHASING AND CURRENT CONDITIONS

Location and Setting. The Guanella Pass Road (FH 80) is located in the Pike and Arapaho National Forests. The route begins in Grant, Colorado at the intersection with U.S. 285 and ends in southwest corner of the historic district of Georgetown, Colorado. The total route length is approximately 23.6 miles. Mileposts (MP) run from south to north. The route is located in mountainous, high alpine terrain. Many lakes and streams are directly adjacent to the roadway. Access to numerous recreation opportunities and some residences are provided from the route.

Project Phasing. Implementation of the route improvements is being performed in three distinct phases. Phase I is approximately 8.8 miles long and is located in the center of the route. Phase I begins at approximately MP 9.3 and continues to approximately MP 17.0. Phase II is approximately 5.5 miles long and is located at the northern end of the route. Phase II begins at MP 17.0 and ends in Georgetown, Colorado. Phase III is located at the southern end of the route and is approximately 9.4 miles long. Phase III begins in Grant, Colorado and ends at approximately MP 9.3.

Current Conditions. The current conditions at the time this Route Assessment was developed are as follows:

- Phase I construction was completed in 2007
- Phase II construction is currently underway
- Phase III has been designed to approximately the 70 percent level

SECTION III, HIGHWAY DESIGN AND ENVIRONMENTAL COMMITMENTS

Lane and Shoulder Widths. The Preferred Alternative from the NEPA transportation decision-making process resulted in design and construction of two 9-foot lanes with 2-foot shoulders. Review of the design and construction indicates that these widths have been used. In some cases, the 9-foot lane and 2-foot shoulder widths actually results in a narrower driving surface (lanes and shoulders) than the original roadway. This was done to provide a consistent roadway width that does not introduce unexpected changes to driver expectations.

Level of Construction and Surfacing. The Preferred Alternative developed during the NEPA process consisted of 38 different segments. Nine different improvement strategies were developed to address the 38 segments. These strategies included: Rehabilitate & Pave, Rehabilitate with Macadam, Rehabilitate with Gravel, Light Reconstruct & Pave, Light Reconstruct with Macadam, Light Reconstruct with Gravel, Full Reconstruct & Pave, Full Reconstruct with Macadam and Full Reconstruct with Gravel.

Review of the constructed portion of the project (Phase I), the portion currently under construction (Phase II) and the design plans for the upcoming and final phase of the route (Phase III) against the environmental commitments made during the NEPA process indicate that the design fully addressed the commitments made. These analyses included limits of surfacing, level of construction and specified construction limits.

Retaining Walls. The NEPA process required that retaining walls be used in select locations to minimize cut and fill slope impacts. In addition, retaining walls that would be clearly visible from the road were required to have a natural or natural-looking facing. Review of the design and construction indicates that 20,541 linear feet (3.9 miles) of retaining wall was constructed on the 8.8 mile long Phase I project. Approximately 76 percent of this retaining wall was constructed with totally natural materials, commonly Rockery Walls. The remaining 24 percent was constructed using a mechanically stabilized earth (MSE) wall system. Aesthetically pleasing surface treatments were used on approximately 25 percent of the MSE wall installations that were clearly visible from the roadway.

Review of the design and construction indicates that 11,064 linear feet (2.1 miles) of retaining wall is being constructed on the 5.5 mile long Phase II project. Approximately 11 percent of this retaining wall is being constructed with totally natural materials, commonly Rockery Walls. The remaining 89 percent will be constructed using a mechanically stabilized earth (MSE) wall or a cast-in-place (CIP) concrete wall system. Aesthetically pleasing surface treatments will be used on approximately 81 percent of the Phase II MSE and CIP wall installations.

Review of the design and construction indicates that 3,884 linear feet (0.7 miles) of retaining wall will be constructed on the 9.4 mile long Phase III project. Approximately 68 percent of this retaining wall will be constructed with totally natural materials, commonly Rockery Walls. The remaining 32 percent will be constructed using a CIP concrete wall system. Aesthetically pleasing surface treatments will be used on 100 percent of the CIP wall installations.

In summary, approximately 28 percent of the 23.7 mile route will have some form of retaining wall to reduce the roadway footprint (i.e., cut and fill slope impacts). Of that 28 percent, approximately 84 percent of the retaining wall will have an aesthetically pleasing surface

treatment. Constructing retaining wall along more than one quarter of the 23.7 mile route length shows a sincere commitment to reduce cut and fill slope impacts. Examples of the aesthetic surface treatments for the retaining walls are shown in Figures 1 and 2 below.

Figure 1. Retaining Wall with Simulated Stone Face

Figure 2. Rockery Wall, Current Conditions

Figure 3 on the following page provides an indication of the gravel surface condition shortly after construction. Comparison of Figures 2 and 3 indicate the degradation that has occurred in the gravel surface due to steep roadway grades and significant moisture.

Figure 3. Rockery Wall Area after Construction

Steel Backed Timber Guardrail. A special type of guardrail was selected to perpetuate the rustic character of the roadway. This steel backed timber guardrail as well as the simulated stone retaining wall facing shown in Figure 1 above was selected in coordination with the USFS and the local governing bodies.

The guardrail is made of wooden timbers that are reinforced on the back side using steel plate. The result is a strong guardrail structure with a pleasing and rustic appearance that blends into the natural terrain. Figure 4 shows an example of the guardrail at a pullout location.

Figure 4. Steel Backed Timber Guardrail

Wildlife Crossings. The NEPA process identified the need to provide wildlife crossing installations in areas where retaining walls are being constructed. Review of the design plans and the constructed portion of the route indicate that this commitment is being upheld.

The solution developed for the wildlife crossings include construction of a boulder ramps in front of the retaining wall and a lowered section of guardrail at the boulder ramp to direct animals to the location. Eight wildlife crossings were constructed in Phase I. Eight wildlife crossing are scheduled to be constructed in Phase II and Phase III locations are under development.

An example of these wildlife crossings is shown in the background of Figure 5.

Figure 5. Wildlife Crossing

Water Quality. The water quality objective is one of the environmental commitments that have not been totally achieved. From the outset, the FHWA indicated that providing a hardened surface on the roadway would improve water quality.

The route improvements, as envisioned and agreed to during the NEPA process, included placing asphalt pavement or a macadam surface on approximately 86 percent of the route. The remaining 14 percent would be surfaced with gravel. The asphalt pavement surfaces have performed well. The macadam surfaces have performed well from a water quality standpoint, but this application is showing indications of premature aging. The gravel sections have not performed well from any standpoint (structural, safety or water quality).

Phase I of the project has been constructed. The portion of Phase I that was specified to have a gravel surface was constructed according to the commitments made during the NEPA transportation decision-making process. The results show that steep roadway grades combined with frequent fall and spring snowmelt make for a less than desirable situation from an environmental, maintenance, safety and roadway user perspective.

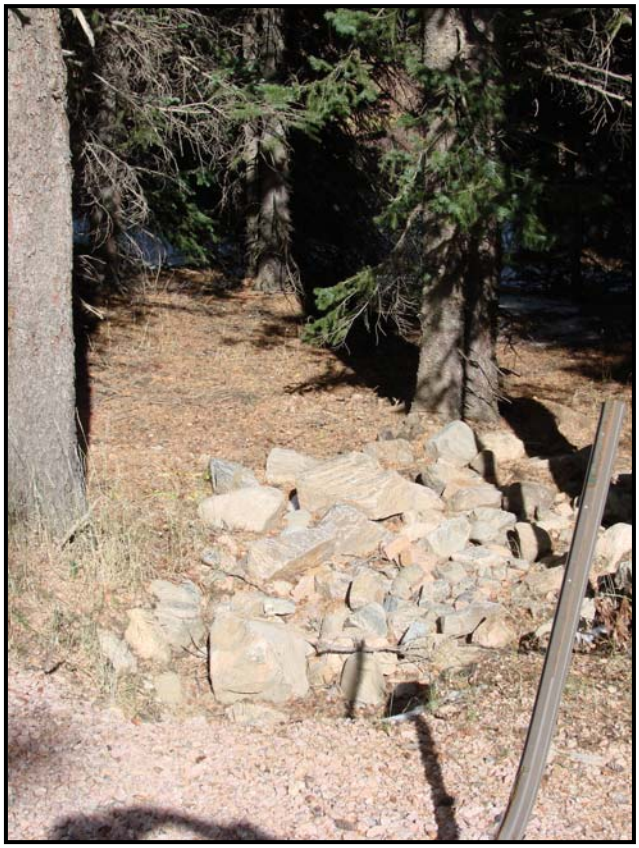

Figure 6. Constructed Energy Dissipater Adjacent to Macadam Surfacing

Comparison of Figures 6 and 7 provide an indication of the water quality benefits provided by a hardened roadway surface. As can be seen in Figure 7 runoff from the adjacent gravel roadway is laden with the fine material. While in Figure 6 the runoff from the hardened macadam surface is free of sediment.

Conditions similar to those shown in Figures 6 and 7 were evident along the entire Phase I portion of the route. Drainage facilities in portions of Phase I showed signs of sediment moving away from the construction. While, drainage facilities in the portions of the roadway surfaced with macadam or asphalt presented evidence that sediment was being well managed.

Figure 7. Constructed Energy Dissipater Adjacent to Gravel Surfacing

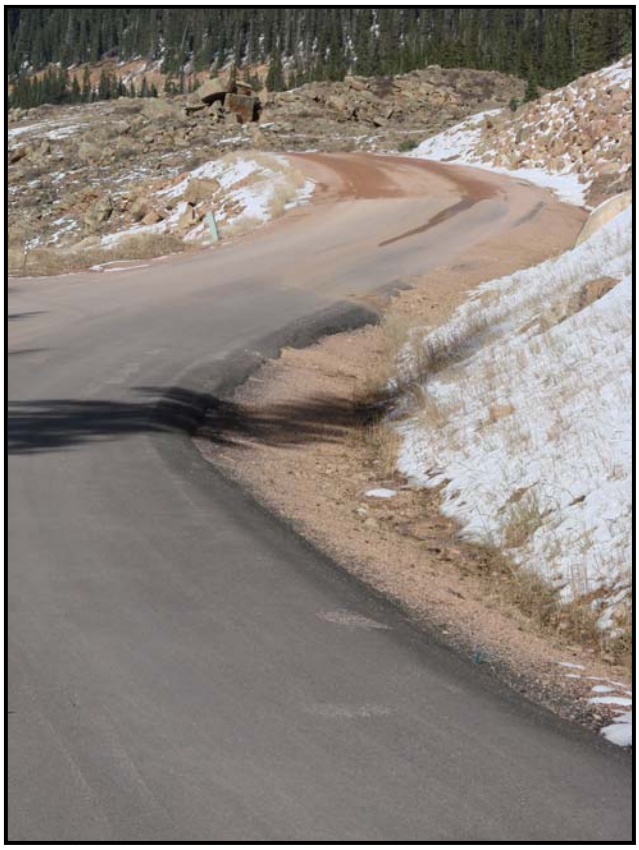

Comparison of Figures 8 and 9 provide another indication of the water quality benefits associated with a hardened roadway surface. The ditch along the asphalt pavement section of the roadway in Figure 8 is neat, clean and free from sediment. In Figure 9, the gravel surface adjacent to the ditch acts as a major source for sediment. Close observation of Figure 9 indicates that the water being carried by the ditch contains a large amount of sediment. This sediment will ultimately travel downstream and disperse into the watershed. Rutting in the gravel section is also notable.

Further, it should be pointed out that the cut slopes in both Figures 8 and 9 are well vegetated and are not contributing to the sediment runoff. In fact, the revegetation through out the constructed portion of the route appears to be filling in very well.

Figure 8. Ditch along Constructed Asphalt Pavement Surfacing

Figure 9. Ditch along Constructed Gravel Surfacing

SECTION IV, SURFACING

General. The focus of this Section of the assessment is to discuss the anticipated long term performance and sustainability of the surfacing as currently designed. Under the current NEPA transportation decision-making process, approximately 56 percent of the route will be surfaced with asphalt pavement, 30 percent will be surfaced with macadam and 14 percent will be surfaced with gravel. Generally, the NEPA process resulted in the concept to pave the areas that were originally paved and construct a gravel or macadam surface in areas that were originally surfaced with gravel or native material. The gravel sections include the application of a dust palliative in an effort to mitigate dust and reduce surface deterioration.

Traffic Volumes. The FEIS indicates that the weekend traffic volume during the summer and fall months is anticipated to be between 640 and 1,935 vehicles per day (VPD) in the year 2025. The variation in VPD is dependent on the location along the route. The FEIS estimates include an increase for general population growth and a specific increase due to the constructed and planned route improvements. Using the data presented in the FEIS, the average daily traffic (on a yearly basis) is estimated to be between 197 and 560 VPD in the year 2025 depending on location.

As a frame of reference, some Colorado County Public Works Departments use a dust palliative when 200 or more vehicles use the road on a daily basis (VPD). When traffic volumes exceed 350 VPD, the Counties will commonly move toward a surfacing that is more stable, for instance recycled asphalt. Recycled asphalt is produced by milling existing asphalt pavement into fine grained material. The residual asphalt cement in the recycled asphalt helps hold the fine grained material in place and additives are commonly mixed into the recycled pavement in attempts to improve cohesion.

For traffic volumes above 700 VPD, asphalt pavement is typically the standard practice. This is because asphalt pavement has reduced maintenance needs, essentially eliminates dust, provides a superior riding surface and reduces drainage maintenance requirements. In 1999, the USFS published the *"Dust Palliative Selection and Application Guide"*. This guide indicates that application of dust palliatives can be found to be effective up to approximately 500 VPD. After which asphalt pavement, or some other form of improved surface is recommended. The traffic projections above clearly indicate that some form of hardened surface is desirable to reduce water quality impacts and maintenance costs.

Gravel Surface. The entire route was observed during two site visits in October and November of 2008. At the time of the site visits the constructed (Phase I) portions of the gravel surface were approximately 1 year old. During the site visits, the constructed gravel sections showed signs of significant degradation. Extensive rutting, washboarding and potholing were present in the constructed gravel surface.

Dust Palliative. As discussed above, dust palliatives have been found to be effective up to traffic volumes of 250 to 500 VPD. Information presented in the FEIS indicate that year 1995 actual weekend traffic volumes on the north side of Guanella Pass already exceed the dust palliative threshold (607 VPD).

Dust palliatives are typically required to be applied at least two times each season and are

relatively expensive. Application of dust palliatives can run on the order of $100,000 per year per mile. Any available dust palliative short of petroleum (the selected product applied to the surface at the time of construction was a 50/50 mix of Lignosulfonate and Magnesium Chloride) is known to perform only moderately in wet or rainy conditions. Further, gravel surfaces, especially those in mountainous environments, require frequent maintenance. A well performing and safe driving gravel roadway surface on steep grades and in high alpine terrain can be difficult and costly to maintain.

Environmental Conditions. The gravel surface portion of the roadway in the vicinity of the summit is very steep in many locations (approximately 7 to 10.6 percent). During the fall and spring months heavy snowfall and rapid melting result in significant water damage due to saturation and runoff. Roadway grades of this magnitude, exacerbated by the current and projected traffic volumes, and combined with water runoff in the form of rain or more importantly rapid snowmelt during freeze/thaw cycles, make it very difficult to design, construct or maintain a gravel surface that possesses even marginal integrity.

Figures 10 and 11 provide an indication of the environmental conditions the roadway surface is subject to. During periods of snow melt when the surface is not frozen, the gravel becomes saturated and loose. Vehicle traffic and additional water runoff then displaces the material. It should be noted that the original conditions (prior to any construction) included limited amounts of gravel on the surface of the roadway. In most cases, the segments of "gravel" roadway prior to construction, lacked any real gravel surface and consisted primarily of native subgrade soils.

Figure 10. Phase I Constructed Gravel Surface Showing Signs of Significant Washboarding

Figure 11. Phase I Constructed Gravel Surface Showing Signs of Pothole Degradation

Figure 12. Phase I Constructed Gravel Surface After Construction

Figure 12 shows the condition of the gravel surface shortly after construction. This Figure is taken from the same general location as Figure 10. The contrasting difference in surface conditions is an indication of the aggressive environmental conditions the surface is subject to.

Figure 13 is an example of the extensive and relatively dangerous rutting that is taking place. Roadway grades in this area are approximately 9.0 percent. Rutting of this nature may have originated by water channelizing in vehicle tracks made in the snow. As a frame of reference, roadway ditches in erodible soils such as gravel are typically protected with some form of hardened surface or stable material when grades exceed 5.0 percent.

Figure 13. Phase I Constructed Gravel Surface Showing Signs of Significant Rutting

Corrective Action, Gravel Surfacing. The combined effects of steep roadway grades, wet conditions, rapid changes in temperature and current traffic volumes all contribute to the degradation being observed in the constructed gravel surface. Engineering practice indicates that surfacing the roadway with an impermeable layer is the most effective means of solving the problem. This would lead to a solution that includes constructing asphalt pavement.

The desire to reduce the contrast between the roadway and the surrounding terrain was a key component of the NEPA transportation decision-making process in the Guanella Pass summit area. Primary concerns included the effects that a black asphalt pavement surface would have when viewed from nearby hiking trails, wilderness areas and mountain peaks as well as from the roadway itself. These concerns are completely valid. However, the concerns of excessive maintenance, sustainability, protection of investment, safety of the traveling public and water quality are also very real concerns.

Mitigation of the contrasting visual impacts of black pavement in a natural setting has already been employed on the project. The use of a chip seal surface reduces the visual contrast because the chips are placed on top of the asphalt cement and help hide the black color. In addition, a chip seal surface is commonly applied as a preventative maintenance measure on asphalt pavements. Whether the chip seal is applied now, or in 5 years, or in 10 years the desired reduction in contrast will be achieved.

The recommendation for the constructed gravel surface in Phase I and planned to be constructed gravel surface in Phase III is to construct an asphalt pavement and apply a chip seal surface to reduce visual impacts, reduce water quality and dust impacts, maintain the rustic nature of the route, reduce maintenance and provide a uniform surface that maintains consistent driver expectations.

Macadam (Chip Seal) Surfacing. At the time of the site visits the constructed (Phase I) portions of the macadam surface were approximately 1 year old. At the time of the observation the constructed macadam surface showed signs of localized premature degradation. The macadam surfacing was constructed on top of a gravel surface that was strengthened by adding cement and water to the mixture.

Washboarding and minor rutting were observed on steeper roadway areas. Potholing had occurred in isolated locations and failure due to "shoving" was present in switchback locations. This would help explain why corrugations, "washboarding", is starting to appear on the steeper sections of the constructed macadam surfaces. Figure 14 shows one of the areas where washboarding and rutting is beginning to appear.

Figure 14. Minor Washboarding and Rutting in Constructed Macadam Surface

Isolated Potholes and Shoving. Although relatively limited in extent, some areas of the constructed macadam surface are showing signs of failure. These failures consist of the formation of potholes and deformation of the surface.

Figure 15. Isolated Potholes (Repaired) in the Constructed Macadam Surface

It should be noted that the pothole degradation shown in Figures 15 and 16 is not wide spread through out the constructed macadam area. However, given that the surface has only been in service for approximately 1 year, the observed degradation is premature when compared with similar facilities. Further, this degradation is expected to continue to occur at an accelerated rate.

Figure 16. Isolated Potholes in the Constructed Macadam Surface

Figure 17. Isolated Shoving in the Constructed Macadam Surface

Corrective Action, Macadam Surface. Findings of this Route Assessment indicate that the macadam surface is not strong enough to support the current and anticipated traffic volumes given the environmental conditions (grades, snowmelt and freeze/thaw) that the surface is subject to and constructing asphalt pavement in the macadam areas is recommended.

If the asphalt pavement is placed on top of the existing macadam, consideration will need to be given to how the steel backed timber guardrail would be raised and the effect of this additional pavement thickness on the curb reveal of the paved ditches

Environmental concerns regarding the rustic appearance of the roadway and visual obtrusiveness could be mitigated using a chip seal surface on top of the asphalt pavement. This mitigation measure is similar to that proposed for the gravel and asphalt surfaces discussed above.

Reduction of Observed Problems. Many of the problems observed in the gravel and macadam surface would be alleviated by constructing asphalt pavement with a chip seal surface. Placement of chip seal on top of asphalt pavement (rather than on top of earthen/gravel materials) has the following benefits:

- Asphalt pavement absorbs energy from sunlight in the form of heat. Provided that the chip seal is applied to the asphalt pavement during periods of sun and warm temperatures the bonding between the asphalt and chip seal would be improved.
- The asphalt pavement surface on which the chip seal would be placed would be uniform in nature and more importantly would be or could be free of deleterious material that might weaken the bond.
- The underlying and impermeable asphalt pavement surface will withstand the rigors of snowmelt and freeze/thaw conditions. This will protect the infrastructure investment from degradation due to water infiltration and into the underlying layers.

- Maintenance operations would still be required. However, the frequency of these operations would be greatly reduced. Periodic crack sealing and additional chip seal applications would be required. However, the need for these operations will be much less frequent than spot repairs in the chip seal surface and addition of gravel and frequent grading of the gravel surface.
- The potentially negative environmental effects of using a dust palliative on the gravel sections would be eliminated.
- Water quality, dust, safety and other potential maintenance related impacts would be dramatically reduced in the gravel surfacing sections.

Figures 18 and 19 below compare and contrast the water quality benefits between a gravel and hardened surface in the specific environmental conditions that is the subject of this assessment. The reduced potential for introduction of sediment into the watershed is significant. The improved hardened surface could still maintain the desired rustic character and the route is far more sustainable.

Figure 18. Gravel Surface

Figure 19. Hardened Surface

SECTION V, SAFETY

General. One of the cardinal rules of highway design is to reduce the potential for introducing change to driver expectations. The first step in achieving this goal is to provide a uniform lane and shoulder width along the route. The constructed and proposed route improvements have successfully addressed this goal.

The second step is to remove or mitigate hazards such as obstacles and steep slopes adjacent to the roadside. This area is commonly referred to as the roadside clear-zone. This objective has also been addressed by the route improvements through the use of aesthetically pleasing steel backed timber guardrail and removal of obstructions that are directly adjacent to the roadway. It must be understood that this element of safety design must be considered within the context of allowable or preferred reduction in environmental disturbance.

The third and less concrete goal is to provide a self regulating/self enforcing roadway that uses roadway width, curvature and grade to affect a positive behavioral perception of the driver. In other words, a normal driver will go slower when the lane width the driver is presented with is narrower. Similarly, the normal driver will go slower on a steep road with curves than they will on a flat and straight road. The route improvements have achieved this goal by virtue of maintaining the original alignment as much as possible and constructing lane widths applicable for a local road.

The fourth goal which builds on the first goal of reducing changes in driver expectation is to provide a uniform roadway surface. It has been shown that changes over 10 mph or more in the average travel speed of a facility result in a noticeable increase of crash frequency. Due to the desire on this particular route to reduce environmental impacts in a mountainous setting and use the existing roadway as much as possible, little can be done to reduce variations in speed due to the curvilinear alignment and varying profile grades of the original roadway. Further, the use of curves and changes in grade help promote a self regulating/self enforcing roadway.

However, elimination of direct roadway hazards such as severe surface rutting, potholes and varying surface conditions brought about by the use of varying and non performing surface materials can be mitigated. The constructed gravel sections present a reduced relative level of safety because of severe rutting. Optimal conditions would include a uniform surface treatment that motorists can anticipate. These optimal conditions would include a hardened surface relatively free of deformations and consistent drainage characteristics along the route. In addition, the presence of a uniform surface material that encourages melting through heat absorption would benefit the traveling public.

Crash Severity and Type. It can generally be stated that slower speeds help reduce crash severity. The use of 9-foot lanes with 2-foot shoulders as agreed to during the NEPA process combined with the curvilinear and steep terrain will provide a self regulating/self enforcing roadway and will help reduce the speed of normal drivers. Steel back timber guardrail along retaining walls and in the vicinity of steep tall fill slopes in reconstructed portions of the project will provide protection against “run-off-the-road” type accidents. Given the attributes of the project, it is anticipated that the most severe type of crash that is likely to happen would be a “head-on” type crash.

Recommendations. The following recommendations assume that the entire route has an asphalt pavement and chip seal surface. Because of the potential severity of a "head-on" crash it is recommended that yellow centerline striping be applied along the entire length of the project. Passing zones should be evaluated and included where possible in the final project to reduce the potential for crashes due to vehicles trying to pass in unsafe locations. Providing a white edge stripe at the 9-foot lane width is not recommended. However, application of a white edge stripe at the outside edge of the 2-foot shoulder would provide an 11-foot traveled way width and should be considered. This would effectively place the white edge stripe at the break point of paved ditches and would accommodate the specified 2-foot "shy" distance adjacent to the steel backed timber guardrail.

Research indicates that some local and regional transportation departments are applying a fog seal to chip seal surfaces and then striping on top of the fog seal. The fog seal helps protect the chip seal surface and improves the contrast between the road surface and the striping. However, one of the primary intents of using a chip seal surface on the Guanella Pass project is to maintain the rustic nature of the route. Therefore, a fog seal on top of the chip seal is not recommended.

Research also indicates that the use of thermoplastic paint (sprayed not preformed) has yielded good results on a chip seal surface. If thermoplastic paint is used, the application rates should be increased above rates typically used on an asphalt pavement surface to account for the higher porosity of the chip seal.

Review of the NEPA documentation also indicates that a separate "horse trail" is to be constructed within portions of the Park County (Phase III) segment of the route. Review of existing design documents for Phase III and discussions with project staff indicate that this attribute is being developed and coordinated with the "horse trail" users.

SECTION VI, FISCAL EVALUATION

General. The first portion of this section provides a comparison between the total capital improvement expenditures (project development and construction costs) for the project as currently planned and the total capital improvement expenditures anticipated if the gravel and macadam surfaces are changed to asphalt pavement with a chip seal topping. This portion of the evaluation uses actual costs that have been incurred to date and estimated costs for work yet to be performed to provide a complete comparison of the planned versus recommended surfacing options. Comparison of the capital improvement costs will provide project decision makers an indication of the difference in the initial outlay of actual program dollars. Costs for this portion of the fiscal evaluation have not been adjusted (up or down) for inflation.

The second element of this section includes a Life Cycle Cost Analysis (LCCA) for the route. Again the planned versus recommended surfacing is considered. The function of this portion of the evaluation is to compare initial construction, yearly maintenance, periodic maintenance and long term major rehabilitation costs of the two alternatives. This portion of the evaluation will assist project decision makers by providing 40 year analysis of the anticipated costs for construction and maintenance. A deterministic approach has been applied in the following LCCA. This method brings all prior and future costs to a present value by inflating costs incurred prior to the base year (2009) and discounting the costs incurred after the base year. For calculation purposes, it has been assumed that the inflation over the analysis period is 4.0 percent per year.

User Costs. Life Cycle Cost Analysis guidance published by the FHWA recommends inclusion of user costs in the LCCA computations. Review of current practices indicates that many of the State, County and Local transportation entities do not include user costs in their LCCA. Primary reasons for omitting this data appear to be due to the difficulty in accurately estimating real costs. An attempt has been made in this Route Assessment to "remove" the cost component of user costs from the analysis while still providing a barometer of the potential user impacts. To achieve this goal, the total sum of construction and maintenance dollars has been normalized by dividing the sum by a "cost per day" value. This approach removes the variable of cost while still providing a benchmark measurement. In short, maintenance and rehabilitation costs are estimated and user "costs" are captured by means of the estimated number of days that heavy equipment would be working on the roadway. Analyzing user costs in this way simply provides a relative number between the Alternatives regardless of the "cost per day" value chosen.

Salvage Value. Life Cycle Cost Analysis also commonly assigns a *salvage value* or *remaining service life value* to the facility at the end of the analysis period. This step has not been included in the LCCA. The reason for this omission is based on the assumption that the salvage value would be equal for both Alternatives.

Alternatives. Alternative A evaluates the project based on Phase I, II and III as currently designed. Alternative B incorporates the recommendations provided in this assessment (asphalt pavement with a chip seal topping over the entire route). Both alternatives have been developed using an analysis period of 40 years. Highway pavements are typically designed for a 20 year design life. In truth, due to conservative engineering estimates and actual scheduling of improvements, the design life is typically slightly longer than 20 years. Therefore, using a 40 year analysis period allows the analysis to incorporate initial construction, yearly and periodic maintenance, one major rehabilitation effort and a partial subsequent cycle of yearly and periodic maintenance.

Alternative A assumes that the project is constructed as currently designed. This Alternative includes 13.3 miles of asphalt pavement without an initial chip seal application, 7.1 miles of macadam surface and 3.3 miles of gravel surface.

Alternative B includes applying an initial chip seal to the areas constructed or scheduled to be constructed with asphalt pavement, constructing asphalt pavement on the areas constructed or scheduled to be constructed with macadam or gravel surfaces and applying an initial chip seal to the asphalt pavement for these areas. Additional surfacing construction costs (for the areas that currently have macadam or gravel) have been calculated for Phase I. Phase II has always been scheduled to receive asphalt pavement. Alternative B also assumes that the entire Phase III will be constructed with an asphalt pavement and a chip seal topping rather than as currently designed.

Maintenance. Three unique maintenance strategies have been developed for each Alternative. These strategies include the following:

- Yearly maintenance associated with grading the gravel sections, patching the macadam and asphalt sections and applying a dust palliative twice a season
- Periodic maintenance and restriping the hardened (macadam and asphalt) surfaces
- One cycle of major rehabilitation for the asphalt pavement segments of the roadway including 2 inches of milling and asphalt pavement reconstruction

Efforts have been made to avoid overlapping of maintenance and rehabilitation processes. During years that periodic or major rehabilitation work is performed, yearly maintenance has been omitted.

Capital Improvement Costs. Costs for the entire project have been computed for both Alternatives. These costs include Preliminary Engineering (the costs to design and develop the project for construction), Construction (the cost spent building the road) and Construction Engineering costs (the costs required to administer and oversee construction). These costs are shown in Table 1 on the following page and have been adjusted to 2009 dollars.

Table 1. Capital Improvement Costs [1]

	Project Development		Alternative 1	Alternative 2
Phase	**Preliminary Engineering**	**Construction Engineering**	**Construction [2]**	**Construction [5]**
Phase I	$2.8	$3.4	$21.3	$24.8
Phase II [3]	$2.6	$4.8 [5]	$30.6	$30.6
Phase III [4]	$2.0 [5]	$2.9 [5]	$18.3 [5]	$18.3 [5], [6]
Totals	$7.3	$11.1	$70.2	$73.7
	Alternative A Total Cost		**$88.6**	
			Alternative B Total Cost	**$92.1**

Notes:

1. Costs are shown in millions of dollars
2. Construction costs are based on the original bid or estimated costs
3. Phase II is currently under construction
4. Phase III is currently at the 70 percent design stage
5. Estimated Costs
6. The cost of changing Phase III to asphalt pavement and chip seal is offset by relatively thick aggregate base section currently proposed in Alternative A and thus costs the same for either Alternative

Review of Table 1 indicates that the Preliminary Engineering costs ($7.3 million) are very close to the industry standard of 10 percent of construction costs. Construction Engineering costs are also within the anticipated norm of 12 to 17 percent of construction costs.

The increased construction cost associated with Alternative B of $3.5 million (Table 1) could result in a reduced total constant dollar cost, due to maintenance cost savings, of approximately $6.9 million (Table 2) in unadjusted costs over 40 years.

It should be noted that the above calculations assume a constant dollar cost. Therefore, the figures presented in Table 1 above will not match with the adjusted costs presented in the LCCA analysis below. Further, the LCCA only considers the surfacing component of the project. It should also be noted that the significant reduction in Phase III, Alternative A, gravel quantities offset the increased costs of asphalt (Alternative B) sufficiently enough that both Phase III Alternatives essentially cost the same.

Life Cycle Cost Analysis (LCCA). The LCCA cost analysis presented below considers constructing Alternative A (the current design) and adjusting the current design to include asphalt pavement and a chip seal topping of the entire route (Alternative B). As might be expected, initial construction and major rehabilitation costs are higher for Alternative B. However, yearly maintenance and periodic rehabilitation costs are less for Alternative B due to the decreased level of effort necessary to maintain a more permanent and sustainable surfacing section.

Table 2. LCCA Results [(1), (2), (3)]

Alternative	Activity						
	Initial Construction	Total Yearly Maintenance (4)	Periodic Rehab. (4)	Major Rehab. (4)	Total Unadjusted Costs	Total Adjusted Costs	User Days
A	$11.1	$9.8	$3.5	$4.1	$28.6	$19.4	2,422 days
B	$14.3	$1.0	$1.7	$4.8	$21.7	$17.4	2,174 days

Notes:

1. Costs are shown in millions of dollars
2. Costs have been inflated/discounted to 2009 levels
3. Costs only consider construction and maintenance for the roadway surfacing portion of the route
4. For the 40 year analysis period.

The results of the LCCA indicate that Alternative A (the current design) will result in surfacing construction and maintenance costs of approximately $19.4 million after being adjusted. Alternative B (asphalt pavement with a chip seal topping) would cost approximately $17.4 million after adjustment. This comparison indicates that approximately $2.0 million can be saved over a forty year period, if the project is surfaced entirely with asphalt pavement and a chip seal topping. In addition, disruption to the traveling public could be reduced approximately 10 percent over the forty year analysis period based on the estimated user days.

It should be noted that the above costs only consider roadway surfacing and associated maintenance costs. Costs that are the same for both alternatives are not considered. The complete analysis for this Fiscal Analysis Section can be found in Appendix B.

SECTION VII, CLOSING

The NEPA process that defined the current design and construction of the route improvements was thoughtfully performed. However, competing social, environmental and economic factors (i.e., perpetuation of a rustic roadway, water quality issues and roadway construction/maintenance realities) have created a project that has diluted the project goals and objectives, decreases the relative level of safety along the route, and compromises the long term sustainability of both the immediate environment and the route.

Key elements of successfully providing a project that all stakeholders can agree with include the following objectives:

- Provide a roadway capable of accommodating year 2025 traffic
- Improve safety
- Provide a route that can be used by the general public, the USFS, and local governing bodies hat advance the visions of growth management plans as currently conceived
- Improve water quality, other environmental considerations and reduce maintenance impacts
- Maintain the rural and scenic character of the roadway and roadside

Construction of an asphalt pavement section with a chip seal topping over the entire length of the route could maintain the context of the roadway as originally anticipated during the NEPA decision-making process. The rustic character could be maintained, construction impacts would not change from those originally conceived and water quality would be improved from existing conditions. It has been shown in actual field conditions that a chip seal application as a topping course can promote the rustic character that is desired and improves the water quality along the route.

Maintenance requirements would be significantly reduced and the use of a chip seal would be fiscally responsible and could promote the rustic character of the roadway. And, the route could appropriately serve the present and future uses that are intended and anticipated.

Appendix A, Typical Sections

REG	STATE	PROJECT	SHEET NO.	TOTAL SHEETS
16	CO	PFH 80-1(2) & 2(4) GUANELLA PASS	A8	

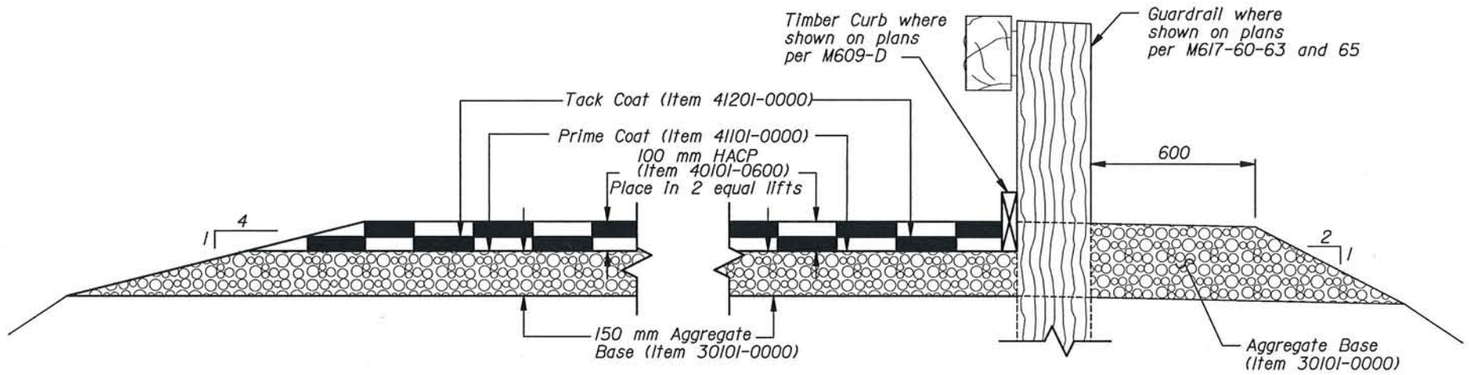

HACP SURFACING DETAIL

1+005 to 1+770
7+500 to 16+003
Geneva Creek Road

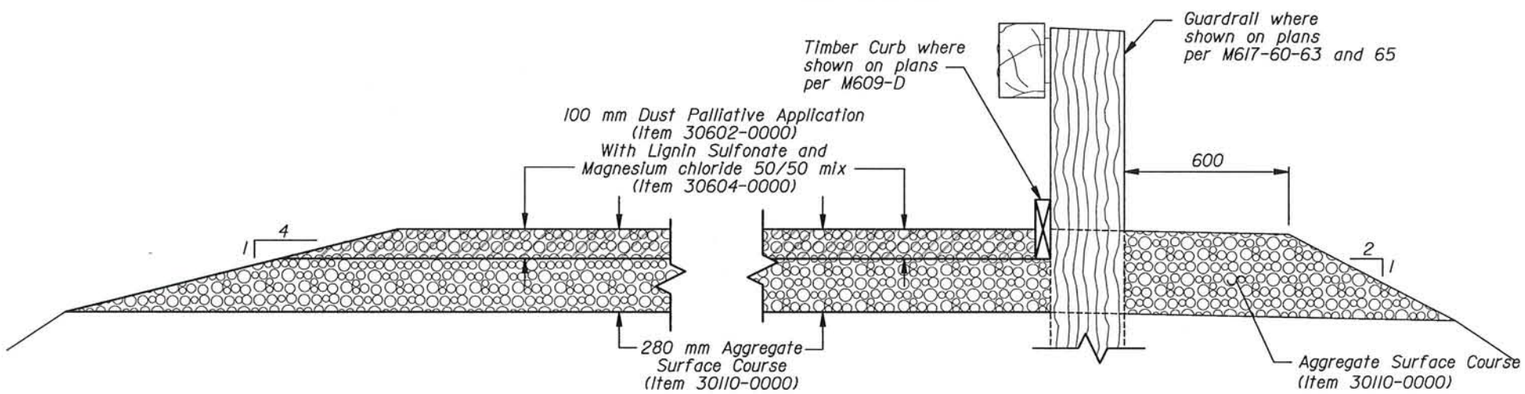

GRAVEL SURFACING DETAIL

5+500 to 7+500
Ellis Access Road

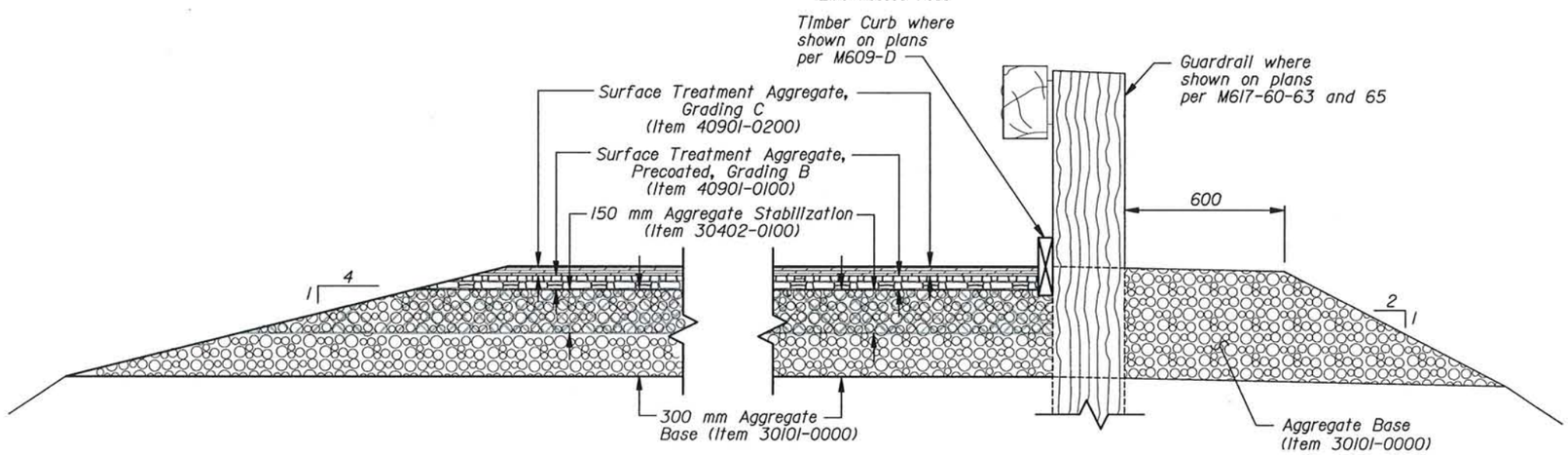

MACADAM SURFACING DETAIL

1+770 to 5+500

Parallel Pullout & Pavement widening Summary

	Station to Station		Side	L	T1	T2
	3+700	3+770	LT	50	10	10
	3+849	3+879	RT	10	10	10
	4+160	4+200	LT	20	10	10
	4+790	4+870	RT	60	10	10
	5+160	5+200	RT	20	10	10
	7+320	7+360	RT	20	10	10
	7+860	7+900	LT	20	10	10
	8+420	8+480	RT	40	10	10
2	8+715	8+846	LT	60	35	36
	14+250	14+290	LT	20	10	10
	14+910	14+940	LT	10	10	10

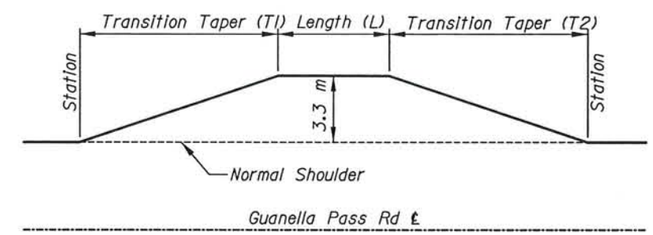

TYPICAL PULLOUT AND WIDENING PLAN

NOTE:
1. Surfacing of pullout areas shall match that of mainline surface unless otherwise noted.

2 See plans for width information.

U.S. DEPARTMENT OF TRANSPORTATION
FEDERAL HIGHWAY ADMINISTRATION
CENTRAL FEDERAL LANDS HIGHWAY DIVISION

MAINLINE
TYPICAL SECTIONS

Appendix B, Life Cycle Cost Analysis (LCCA)

Alternative A	Length	Area	Material Depth: Asphalt	Material Depth: Chip Seal	Material Depth: Gravel	Initial Construction Cost: Asphalt	Initial Construction Cost: Chip Seal	Initial Construction Cost: Gravel	Yearly Maintenance Cost: Pothole Repair	Yearly Maintenance Cost: Grading	Yearly Maintenance Cost: Gravel	Yearly Maintenance Cost: Dust Palliative	Periodic Rehab Costs: Chip Seal	Periodic Rehab Costs: Asphalt	Periodic Rehab Costs: Striping	Major Rehab Costs: Surface Milling	Major Rehab Costs: Chip Seal	Major Rehab Costs: Asphalt Paving	Major Rehab Costs: Striping
	mi	sq yd	in.	lifts	in.	$	$	$	$	$	$	$	$	$	$	$	$	$	$
Phase I (8.8 mi)																			
Asphalt Pavement	1.97	26,582	4		6	$526,324		$318,984	$1,608					$79,746	$6,969	$132,910		$263,162	$6,969
Macadam	4.79	64,633		2	18		$387,798	$2,326,788	$39,103				$193,899		$16,945	$323,165	$639,867		$16,945
Gravel	2.04	27,526			15			$825,780		$41,289	$55,052								
Dust Palliative	2.04	27,526						$34,408				$34,408			**$86,715**				**$979,977**
								$4,420,082	**$40,711**			**$130,749**			**$210,844**				**$403,041**
Phase II (5.5 mi)																			
Asphalt Pavement	5.50	74,213	4		6	$1,469,417		$890,556	$4,490				$222,639		$19,457	$371,065		$734,709	$19,457
								$2,359,973	**$4,490**						**$242,096**				**$1,125,231**
Phase III (9.4 mi)																			
Asphalt Pavement	5.76	77,722	4		6	$1,538,896		$932,664	$4,702					$233,166	$20,377	$388,610		$769,448	$20,377
Macadam	2.40	32,384		2	18		$194,304	$1,165,824	$19,592				$97,152		$8,490	$161,920	$320,602		$8,490
Gravel	1.24	16,732			15			$501,960		$25,098	$33,464								
Dust Palliative	1.24	16,732						$20,915				$20,915			**$253,543**				**$491,012**
								$4,354,563	**$24,294**			**$79,477**			**$105,642**				**$1,178,435**

Alternative B	Length	Area	Material Depth: Asphalt	Material Depth: Chip Seal	Material Depth: Gravel	Initial Construction Cost: Asphalt	Initial Construction Cost: Chip Seal	Initial Construction Cost: Gravel	Yearly Maintenance Cost: Pothole Repair	Yearly Maintenance Cost: Grading	Yearly Maintenance Cost: Gravel	Yearly Maintenance Cost: Dust Palliative	Periodic Rehab Costs: Chip Seal	Periodic Rehab Costs: Asphalt	Periodic Rehab Costs: Striping	Major Rehab Costs: Surface Milling	Major Rehab Costs: Chip Seal	Major Rehab Costs: Asphalt Paving	Major Rehab Costs: Striping
	mi	sq yd	in.	lifts	in.	$	$	$	$	$	$	$	$	$	$	$	$	$	$
Phase IA (8.8 mi)																			
Asphalt Pavement	1.97	26,582	4		6	$526,324		$318,984	$1,608										
Macadam	4.79	64,633		2	18		$387,798	$2,326,788	$39,103										
Gravel	2.04	27,526			15			$825,780		$41,289	$55,052								
Dust Palliative	2.04	27,526						$34,408				$34,408							
								$4,420,082	**$40,711**			**$130,749**			**$0**				**$0**
Phase II (5.5 mi)																			
Asphalt Pavement	5.50	74,213	4		6	$1,469,417		$890,556	$4,490					$222,639	$19,457	$371,065		$734,709	$19,457
Chip Seal	5.50	74,213		1			$222,639												
								$2,582,612	**$4,490**						**$242,096**				**$1,125,231**
Phase IB (8.8 mi)																			
Asphalt Pavement	6.83	92,159	4			$1,824,748													
Chip Seal	6.83	92,159		1			$276,477												
Chip Seal	1.97	26,582		1			$79,746												
Mob, TTC, Incident.								**$654,291**											
								$2,835,262							**$0**				**$0**
Phase I (8.8 mi)																			
Asphalt Pavement	8.80	118,741	4						$7,184					$356,223	$31,131	$593,705		$1,175,536	$31,131
Chip Seal	8.80	118,741		1															
								$0	**$7,184**						**$387,354**				**$1,800,372**
Phase III (9.4 mi)																			
Asphalt Pavement	9.40	126,837	4		6	$2,511,373		$1,522,044	$7,674					$380,511	$33,253	$634,185		$1,255,686	$33,253
Chip Seal	9.40	126,837		1			$380,511												
								$4,413,928	**$7,674**						**$413,764**				**$1,923,124**

2009 Unit Prices								
Item	**Unit**	**Unit Price**	**Area**	**Depth**	**Unit Weight**	**Weight**	**Unit Price**	**Unit**
			sq ft	ft	lb/cf	ton	$	--
Asphalt Pavement (1" Depth)	sq yd	$4.95	9	0.083	147	0.055	$90.00	ton
Chip Seal (Single Application)	sq yd	$3.00					$3.00	sq yd
Gravel (1" Depth)	sq yd	$2.00	9	0.083	133	0.050	$40.00	ton
Dust Palliative	sq yd	$2.25					$2.25	sq yd
Grading	sq yd	$2.00					$2.00	sq yd
Surface Milling (1" Depth)	sq yd	$2.50					$2.50	sq yd
Striping	lf	$0.67					$0.50	sq ft
Pothole Repair	sq yd	$6.05	9	0.083	147	0.055	$110.00	ton

ALTERNATIVE A

															4.0%	$8,000
				Activity						Unadjusted Costs					Adjusted Costs	User Costs
Year	Initial Construction	Yearly Gravel Maintenance	Yearly Macadam / Asphalt Maintenance	Periodic Macadam Rehabilitation	Periodic Asphalt Rehabilitation	Major Rehabilitation	Initial Construction	Yearly Gravel Maintenance	Yearly Macadam / Asphalt Maintenance	Periodic Macadam Rehabilitation	Periodic Asphalt Rehabilitation	Major Rehabilitation	Total Unadjusted	Total Unadjusted* [1/(1+0.04)^(year-2009)]	Adjusted Costs / $8,000
2006	Phase I Construction						$4,420,082						$4,420,082	$4,971,991	621
2007															
2008		I	I					$130,749	$40,711				$171,460	$178,318	22
2009	Phase II Construction	I	I				$2,359,973	$130,749	$40,711				$2,531,433	$2,531,433	316
2010		I	I					$130,749	$40,711				$171,460	$164,865	21
2011		I	II	Phase I Macadam Rehab				$130,749	$4,490	$210,844			$346,083	$319,973	40
2012	Phase III Construction	I	I II				$4,354,563	$130,749	$45,201				$4,530,513	$4,027,610	503
2013		I	I II					$130,749	$45,201				$175,950	$150,403	19
2014		I	III I II III					$210,226	$69,495				$279,721	$229,910	29
2015		I	III I II III					$210,226	$69,495				$279,721	$221,068	28
2016		I	III II III	Phase I Macadam Rehab	Phase I Asphalt Rehab			$210,226	$28,784	$210,844	$86,715		$536,569	$407,748	51
2017		I	III I II	Phase III Macadam Rehab				$210,226	$45,201	$105,642			$361,069	$263,830	33
2018		I	III I II III					$210,226	$69,495				$279,721	$196,528	25
2019		I	III I III		Phase II Asphalt Rehab			$210,226	$65,005		$242,096		$517,327	$349,488	44
2020		I	III I II III					$210,226	$69,495				$279,721	$181,701	23
2021		I	III II III	Phase I Macadam Rehab				$210,226	$28,784	$210,844			$449,854	$280,977	35
2022		I	III I II	Phase III Macadam Rehab	Phase III Asphalt Rehab			$210,226	$45,201	$105,642	$253,543		$614,612	$369,120	46
2023		I	III I II III					$210,226	$69,495				$279,721	$161,532	20
2024		I	III I II III					$210,226	$69,495				$279,721	$155,319	19
2025		I	III I II III					$210,226	$69,495				$279,721	$149,345	19
2026		I	III II III	Phase I Macadam Rehab	Phase I Asphalt Rehab			$210,226	$28,784	$210,844	$86,715		$536,569	$275,460	34
2027		I	III I II	Phase III Macadam Rehab				$210,226	$45,201	$105,642			$361,069	$178,234	22
2028		I	III I II III					$210,226	$69,495				$279,721	$132,767	17
2029		I	III I III		Phase II Asphalt Rehab			$210,226	$65,005		$242,096		$517,327	$236,101	30
2030		I	III I II III					$210,226	$69,495				$279,721	$122,751	15
2031		I	III II III	Phase I Macadam Rehab				$210,226	$28,784	$210,844			$449,854	$189,818	24
2032		I	III I II	Phase III Macadam Rehab	Phase III Asphalt Rehab			$210,226	$45,201	$105,642	$253,543		$614,612	$249,364	31
2033		I	III I II III					$210,226	$69,495				$279,721	$109,125	14
2034		I	III I II III					$210,226	$69,495				$279,721	$104,928	13
2035		I	III I II III					$210,226	$69,495				$279,721	$100,892	13
2036		I	III II III	Phase I Macadam Rehab		Phase I Major Rehab		$210,226	$28,784	$210,844		$1,383,018	$1,832,872	$635,670	79
2037		I	III I II	Phase III Macadam Rehab				$210,226	$45,201	$105,642			$361,069	$120,408	15
2038		I	III I II III					$210,226	$69,495				$279,721	$89,693	11
2039		I	III I III			Phase II Major Rehab		$210,226	$65,005			$1,125,231	$1,400,462	$431,789	54
2040		I	III I II III					$210,226	$69,495				$279,721	$82,926	10
2041		I	III II III	Phase I Macadam Rehab				$210,226	$28,784	$210,844			$449,854	$128,234	16
2042		I	III I II	Phase III Macadam Rehab		Phase III Major Rehab		$210,226	$45,201	$105,642		$1,669,447	$2,030,516	$556,553	70
2043		I	III I II III					$210,226	$69,495				$279,721	$73,721	9
2044		I	III I II III					$210,226	$69,495				$279,721	$70,886	9
2045		I	III I II III					$210,226	$69,495				$279,721	$68,159	9
2046		I	III II III	Phase I Macadam Rehab				$210,226	$28,784	$210,844			$449,854	$105,399	13
							$11,134,618	**$7,721,952**	**$2,066,149**	**$2,320,604**	**$1,164,708**	**$4,177,696**	**$28,585,727**	**$19,374,037**	**2422 days**

ALTERNATIVE B

														4.0%	$8,000
				Activity						Unadjusted Costs				Adjusted Costs	User Costs
Year	Initial Construction	Yearly Gravel Maintenance	Yearly Macadam / Asphalt Maintenance	Periodic Macadam Rehabilitation	Periodic Asphalt Rehabilitation	Major Rehabilitation	Initial Construction	Yearly Gravel Maintenance	Yearly Macadam / Asphalt Maintenance	Periodic Macadam Rehabilitation	Periodic Asphalt Rehabilitation	Major Rehabilitation	Total Unadjusted	Total Unadjusted* [1/(1+0.04)^(year-2009)]	Adjusted Costs / $8,000
2006	Phase IA Construction						$4,420,082						$4,420,082	$4,971,991	621
2007															
2008		I	I					$130,749	$40,711				$171,460	$178,318	22
2009	Phase II Construction	I	I				$2,582,612	$130,749	$40,711				$2,754,072	$2,754,072	344
2010	Phase IB Surfacing						$2,835,262						$2,835,262	$2,726,213	341
2011			II						$4,490				$4,490	$4,151	1
2012	Phase III Construction		I	II			$4,413,928		$11,674				$4,425,602	$3,934,344	492
2013			I	II					$11,674				$11,674	$9,979	1
2014			I	II	III				$19,348				$19,348	$15,903	2
2015			I	II	III				$19,348				$19,348	$15,291	2
2016			I	II	III				$19,348				$19,348	$14,703	2
2017			I	II	III				$19,348				$19,348	$14,137	2
2018			I	II	III				$19,348				$19,348	$13,594	2
2019			I		III	Phase II Rehab			$14,858		$242,096		$256,954	$173,589	22
2020				II	III	Phase I Rehab			$12,164		$387,354		$399,518	$259,519	32
2021			I	II	III				$19,348				$19,348	$12,085	2
2022			I	II		Phase III Rehab			$11,674		$413,764		$425,438	$255,507	32
2023			I	II	III				$19,348				$19,348	$11,173	1
2024			I	II	III				$19,348				$19,348	$10,743	1
2025			I	II	III				$19,348				$19,348	$10,330	1
2026			I	II	III				$19,348				$19,348	$9,933	1
2027			I	II	III				$19,348				$19,348	$9,551	1
2028			I	II	III				$19,348				$19,348	$9,183	1
2029			I	II	III				$19,348				$19,348	$8,830	1
2030			I	II	III				$19,348				$19,348	$8,491	1
2031			I	II	III				$19,348				$19,348	$8,164	1
2032			I	II	III				$19,348				$19,348	$7,850	1
2033			I	II	III				$19,348				$19,348	$7,548	1
2034			I		III	Phase II Major Rehab			$14,858			$1,125,231	$1,140,089	$427,667	53
2035				II	III	Phase I Major Rehab			$12,164			$1,800,372	$1,812,536	$653,762	82
2036			I	II	III				$19,348				$19,348	$6,710	1
2037			I	II		Phase III Major Rehab			$11,674			$1,923,124	$1,934,798	$645,212	81
2038			I	II	III				$19,348				$19,348	$6,204	1
2039			I	II	III				$19,348				$19,348	$5,965	1
2040			I	II	III				$19,348				$19,348	$5,736	1
2041			I	II	III				$19,348				$19,348	$5,515	1
2042			I	II	III				$19,348				$19,348	$5,303	1
2043			I	II	III				$19,348				$19,348	$5,099	1
2044			I		III	Phase II Rehab			$14,858		$242,096		$256,954	$65,116	8
2045				II	III	Phase I Rehab			$12,164		$387,354		$399,518	$97,350	12
2046			I	II	III				$19,348				$19,348	$4,533	1
							$14,251,884	$261,498	$697,374		$1,672,664	$4,848,727	$21,732,147	$17,389,364	2174 days