REG	STATE	PROJECT	SUBSET NO.	SHEET NO.
8	UT	UT PFH 39-1(2) SEVENMILE GOOSEBERRY	X121	122

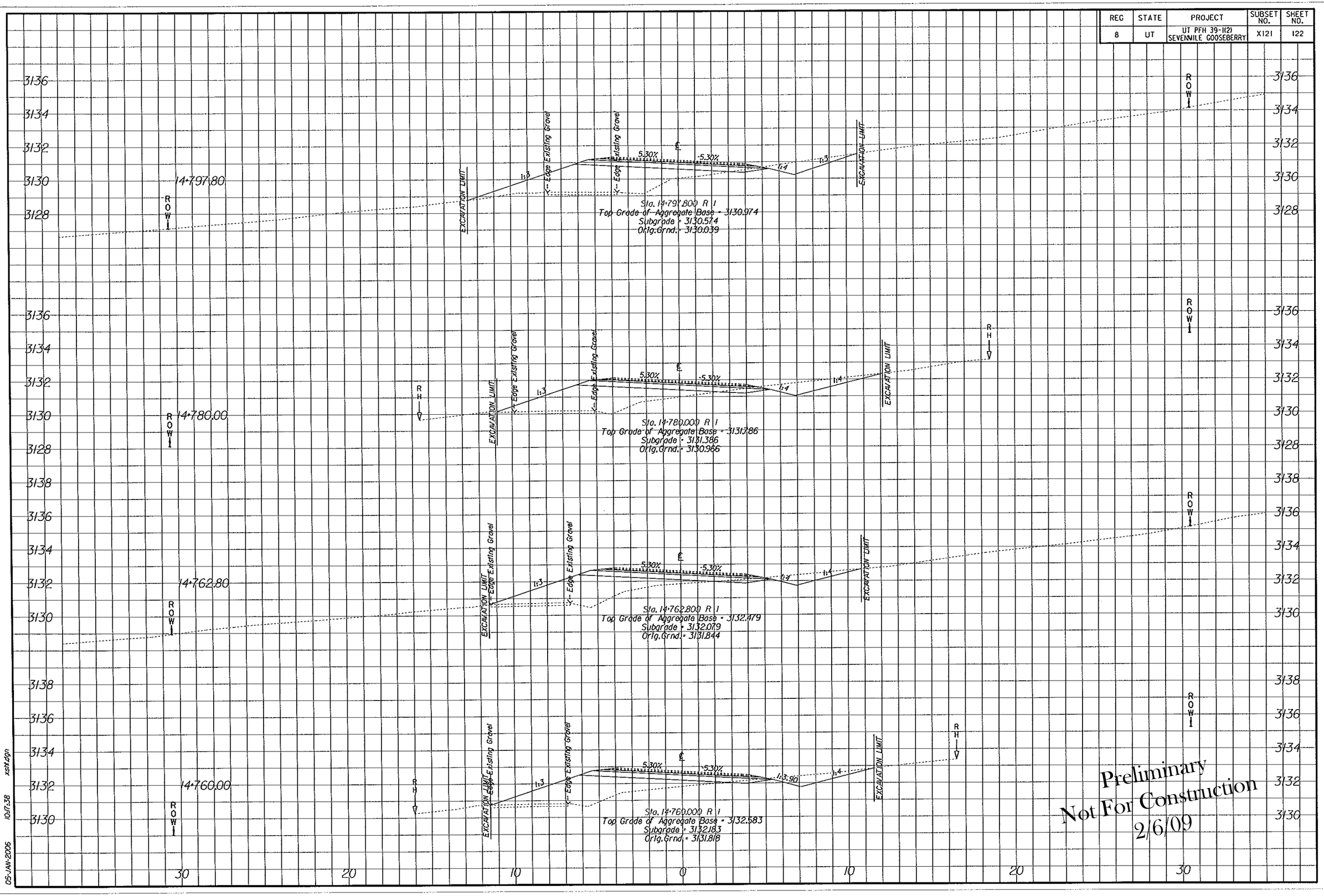

Preliminary
Not For Construction
2/6/09

05-JAN-2006 10:17:58 xsht.dgn

REG	STATE	PROJECT	SUBSET NO.	SHEET NO.
8	UT	UT PFH 39-1(2) SEVENMILE GOOSEBERRY	X122	123

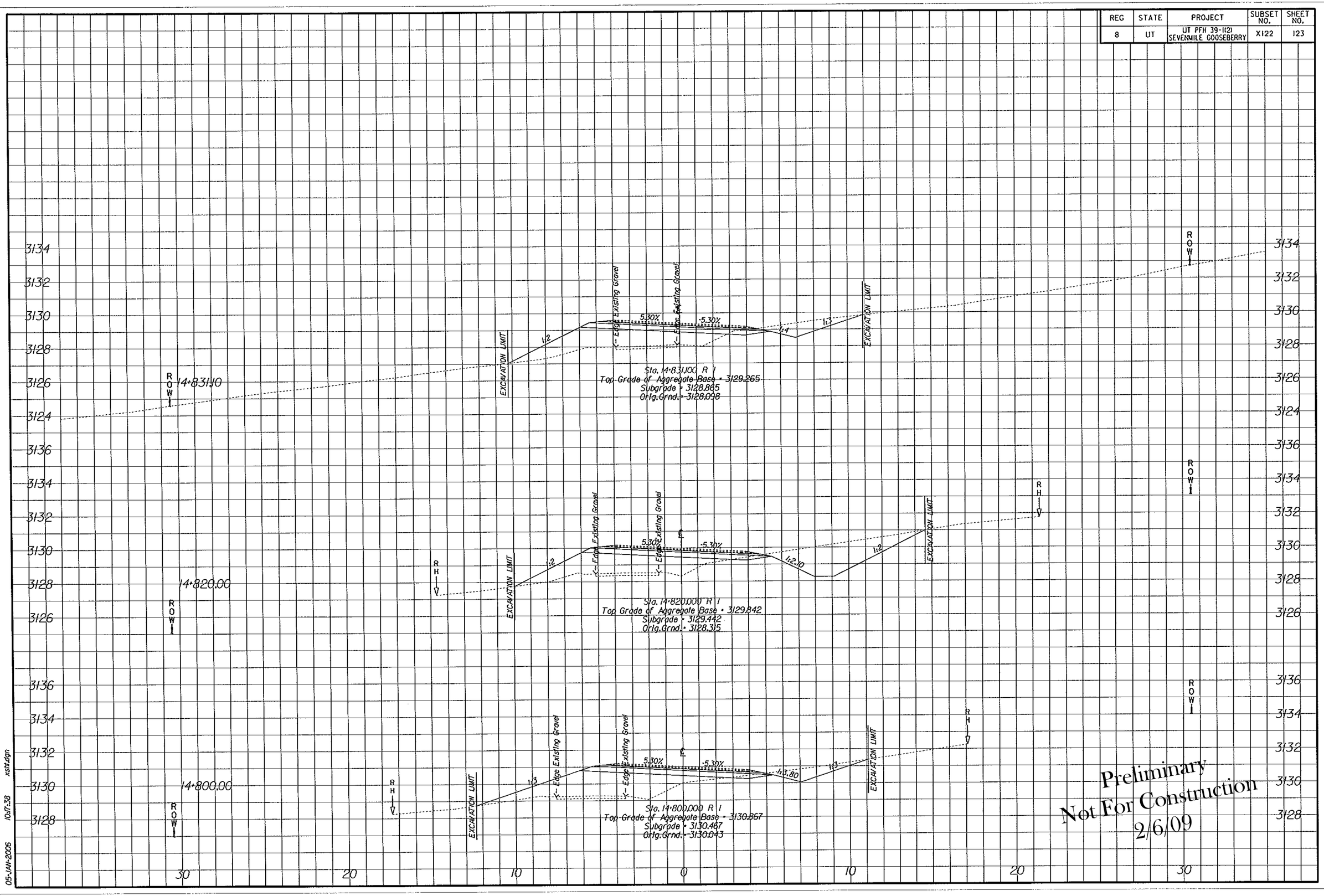

Preliminary
Not For Construction
2/6/09

xsht.dgn 10:17:38 05-JAN-2006

REG	STATE	PROJECT	SUBSET NO.	SHEET NO.
8	UT	UT PFH 39-1(2) SEVENMILE GOOSEBERRY	X123	124

Preliminary
Not For Construction
2/6/09

05-JAN-2006 10:17:38 xsht.dgn

REG	STATE	PROJECT	SUBSET NO.	SHEET NO.
8	UT	UT PFH 39-1(2) SEVENMILE GOOSEBERRY	X124	125

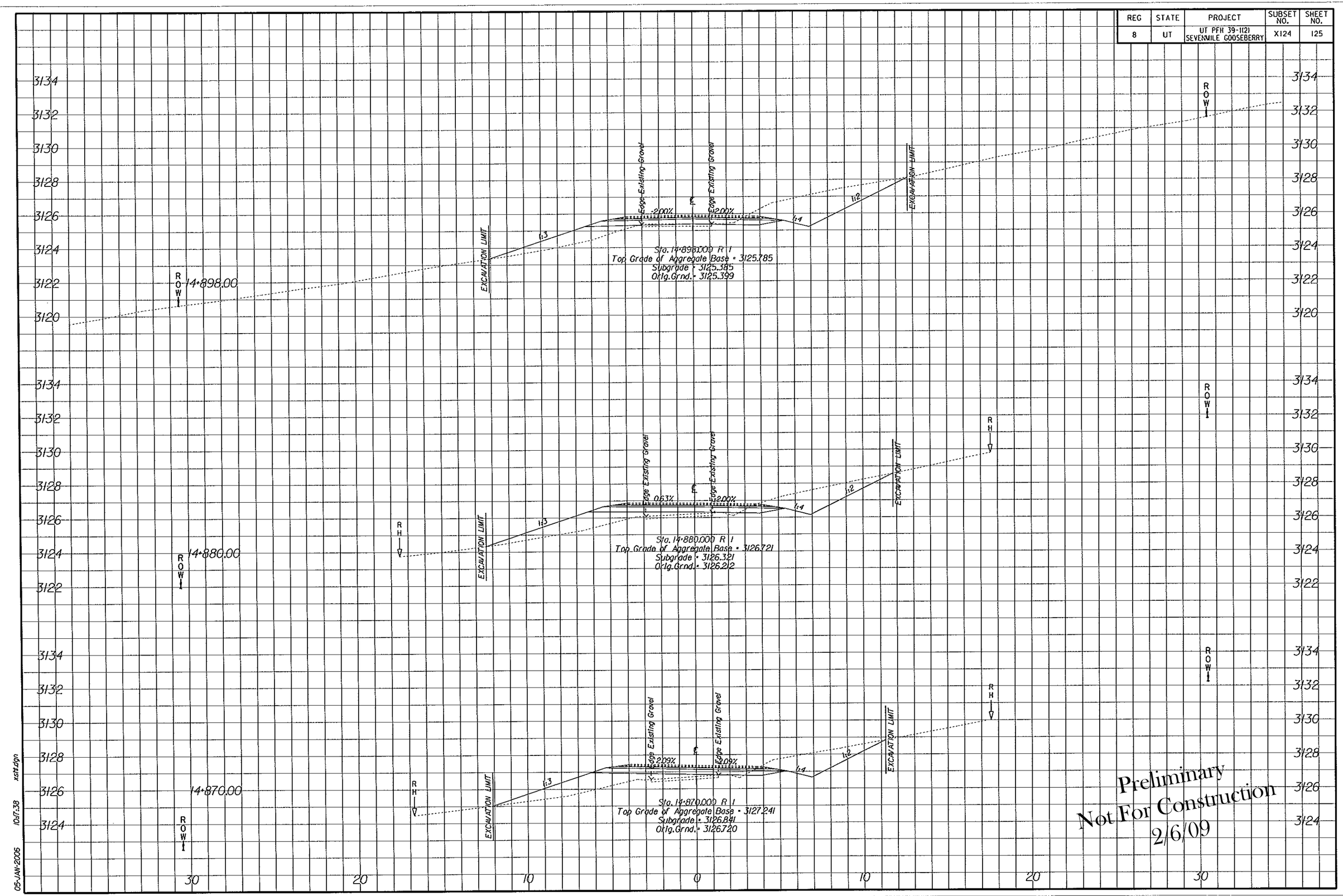

Preliminary
Not For Construction
2/6/09

05-JAN-2006 10:17:38 xsht.dgn

REG	STATE	PROJECT	SUBSET NO.	SHEET NO.
8	UT	UT PFH 39-1(2) SEVENMILE GOOSEBERRY	X125	126

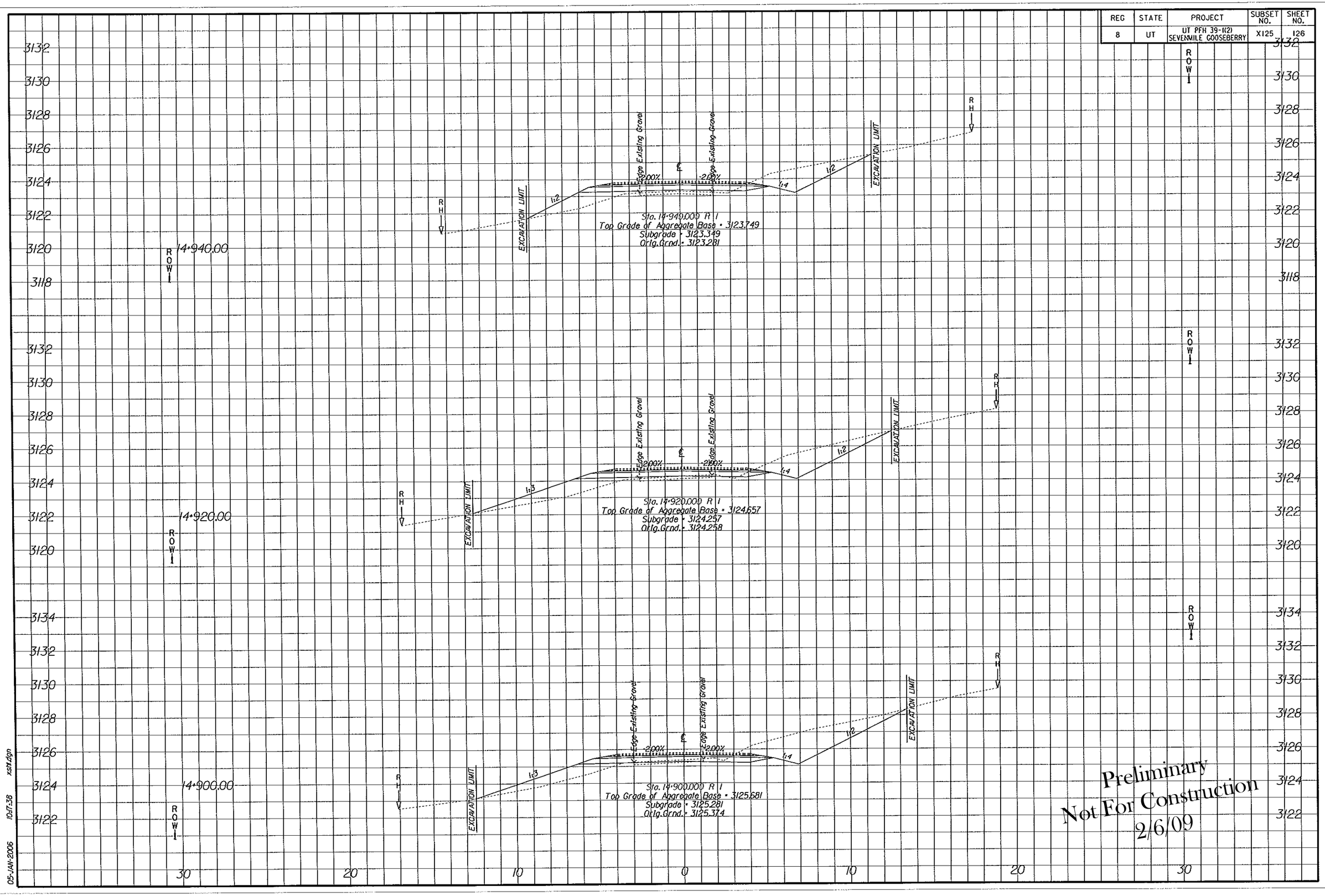

Preliminary
Not For Construction
2/6/09

05-JAN-2006 10:17:38 xsht.dgn

REG	STATE	PROJECT	SUBSET NO.	SHEET NO.
8	UT	UT PFH 39-1(2) SEVENMILE GOOSEBERRY	X126	127

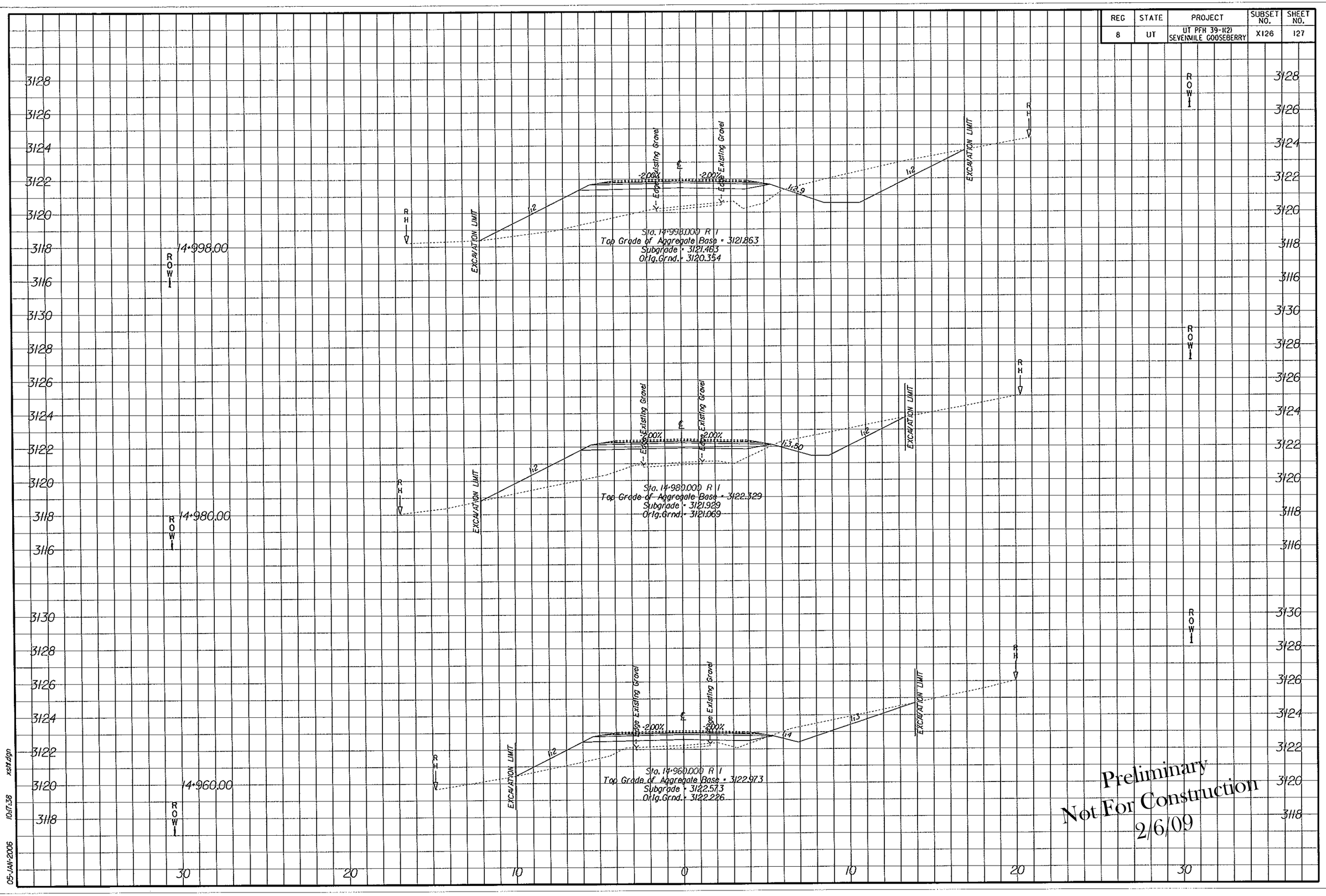

Preliminary
Not For Construction
2/6/09

05-JAN-2006 10:17:38 xsst.dgn

REG	STATE	PROJECT	SUBSET NO.	SHEET NO.
8	UT	UT PFH 39-1(2) SEVENMILE GOOSEBERRY	X127	128

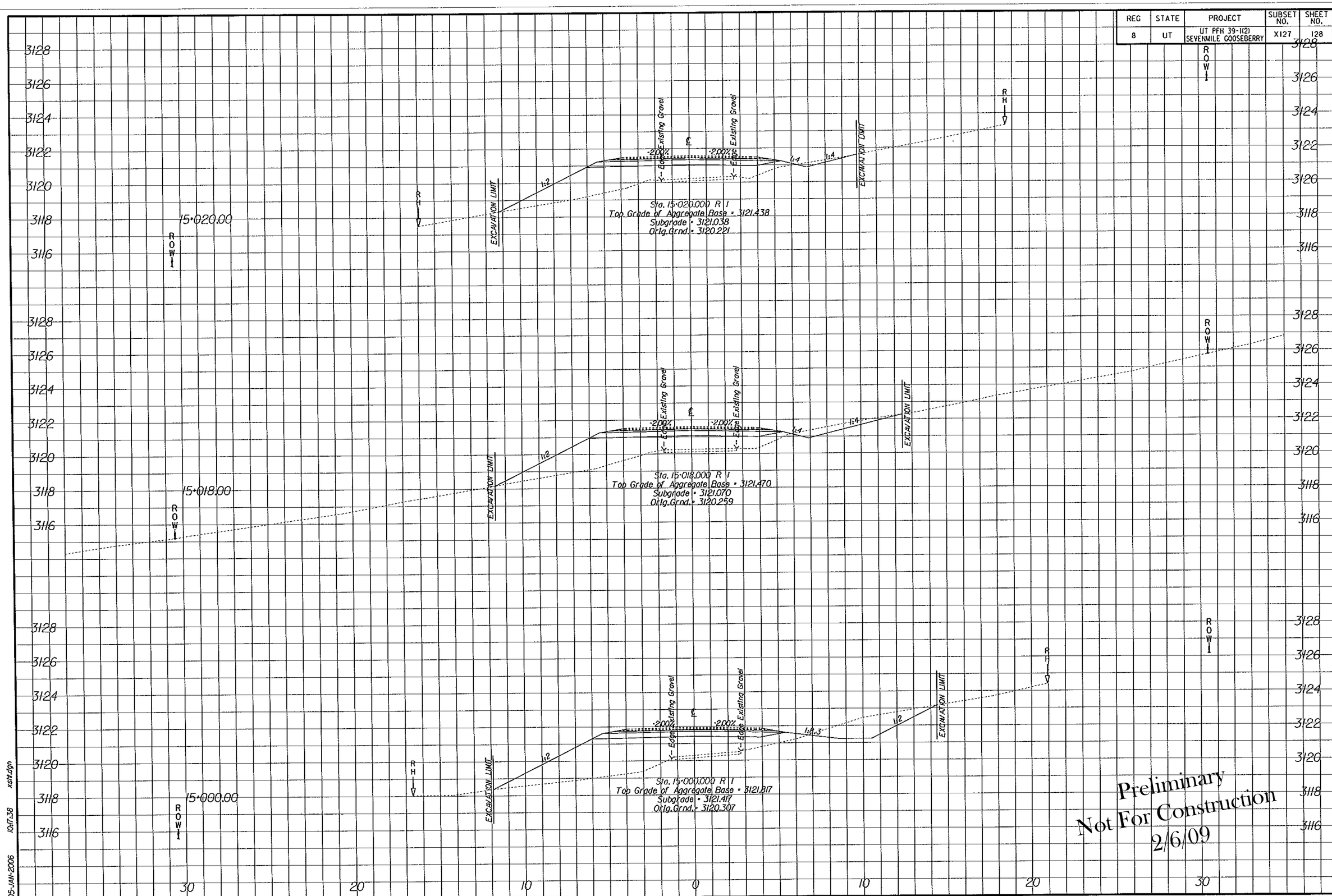

Preliminary
Not For Construction
2/6/09

05-JAN-2006 10:17:38 xsH.dgn

REG	STATE	PROJECT	SUBSET NO.	SHEET NO.
8	UT	UT PFH 39-1(2) SEVENMILE GOOSEBERRY	X128	129

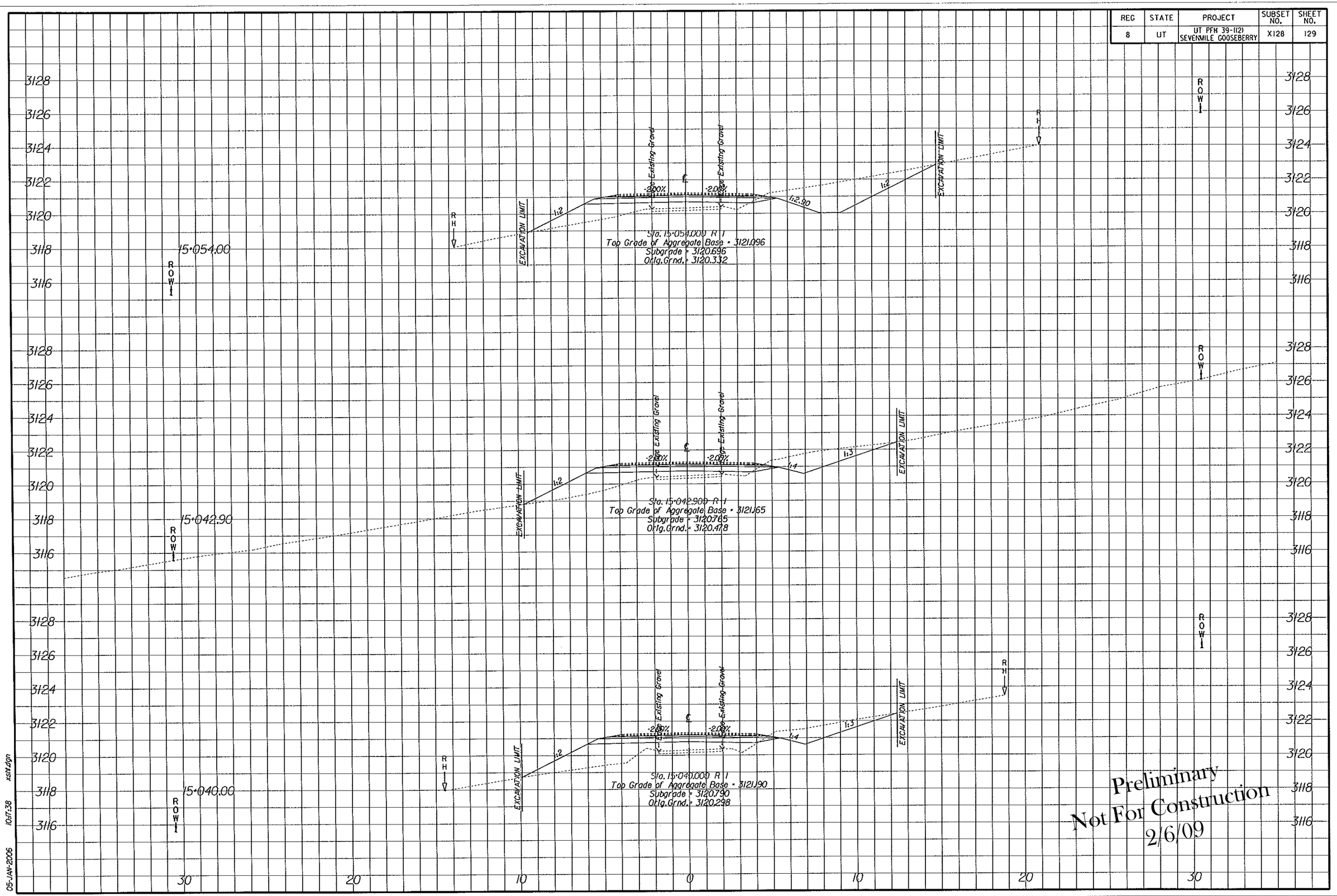

Preliminary
Not For Construction
2/6/09

05-JAN-2006 10:17:38 xsht.dgn

REG	STATE	PROJECT	SUBSET NO.	SHEET NO.
8	UT	UT PFH 39-1(2) SEVENMILE GOOSEBERRY	X129	130

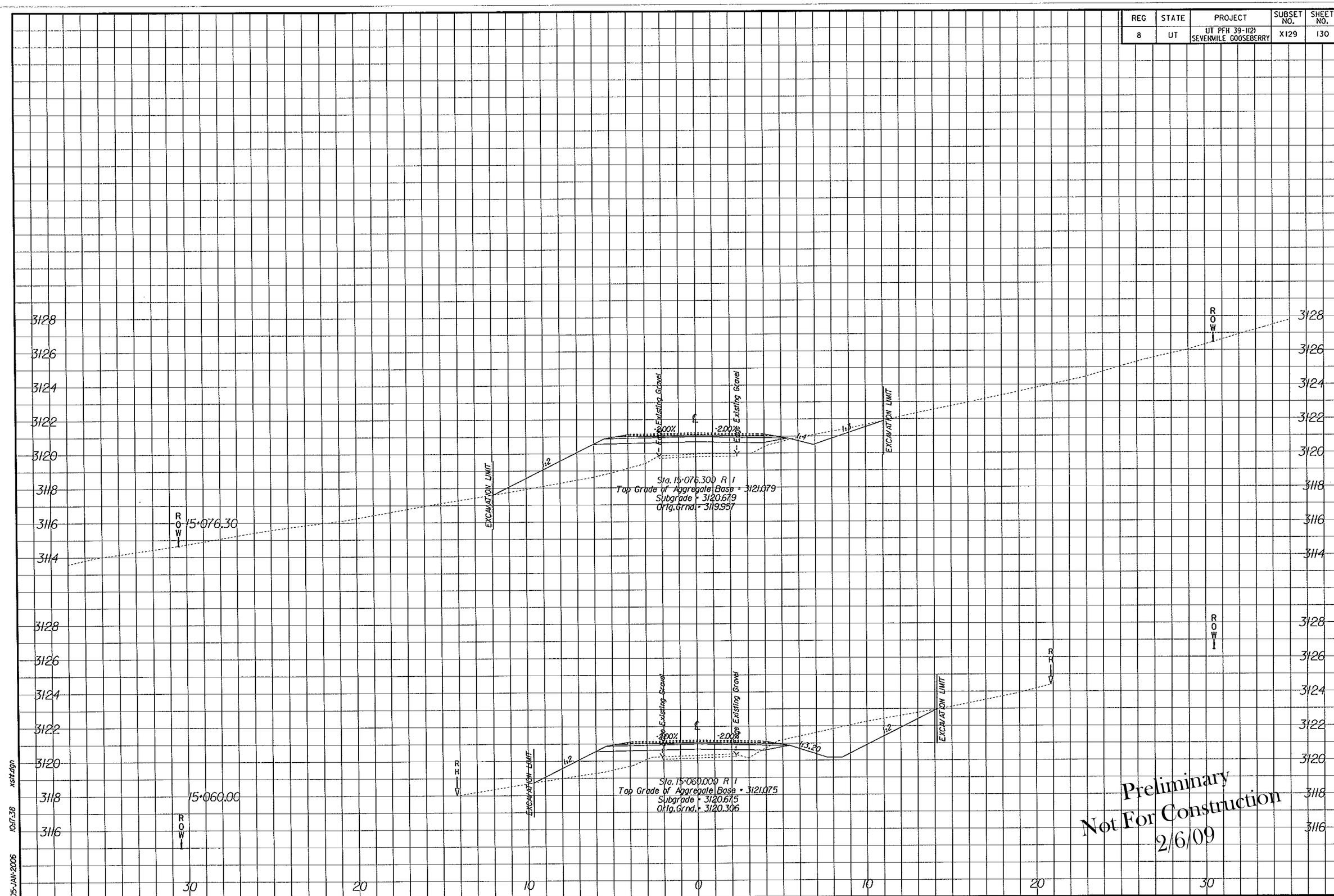

Preliminary
Not For Construction
2/6/09

05-JAN-2006 10:17:38 xsht.dgn

REG	STATE	PROJECT	SUBSET NO.	SHEET NO.
8	UT	UT PFH 39-1(2) SEVENMILE GOOSEBERRY	X130	131

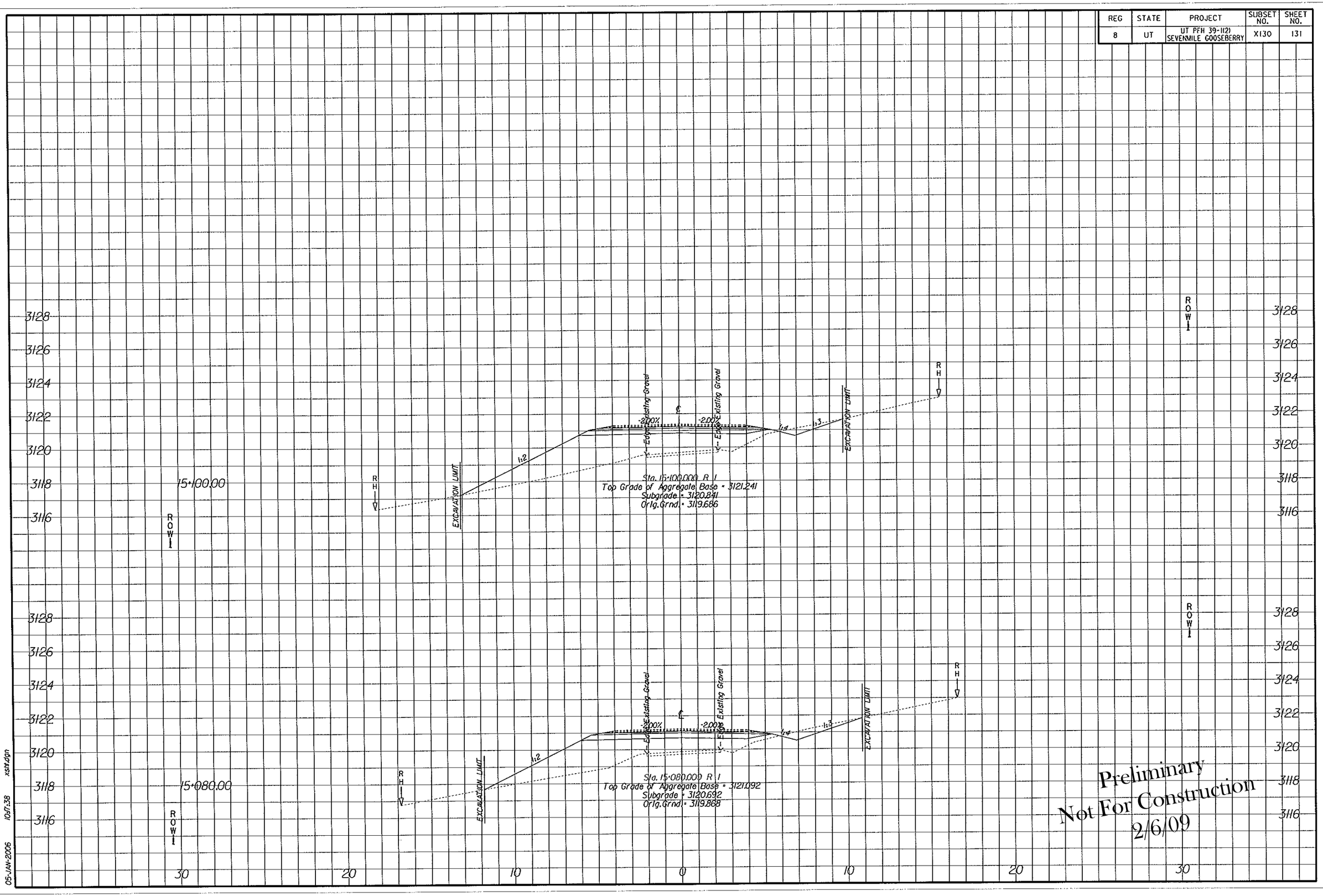

Preliminary
Not For Construction
2/6/09

05-JAN-2006 10:17:38 xsttdgn

REG	STATE	PROJECT	SUBSET NO.	SHEET NO.
8	UT	UT PFH 39-1(2) SEVENMILE GOOSEBERRY	X131	132

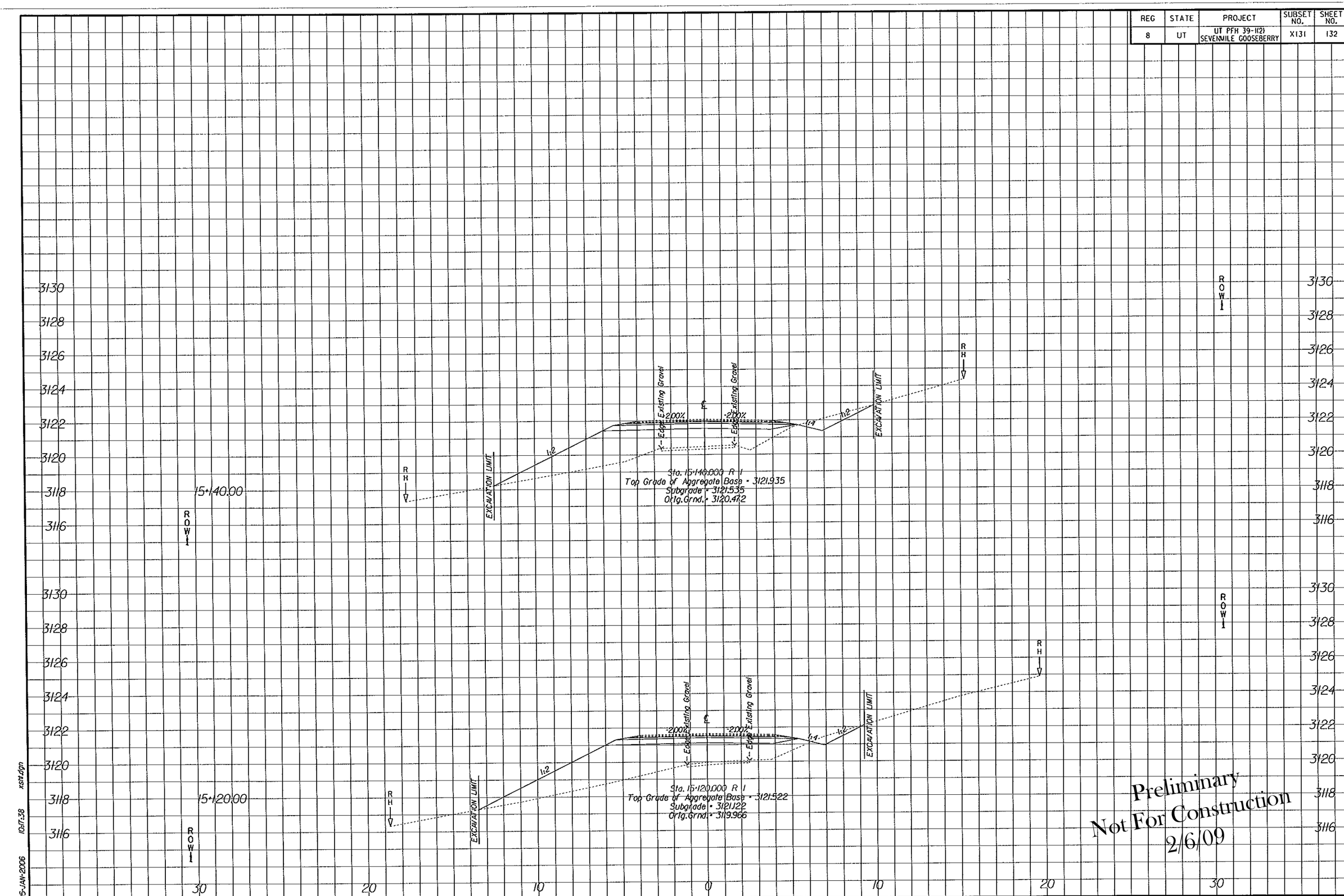

Preliminary
Not For Construction
2/6/09

05-JAN-2006 10:17:38 xsht.dgn

REG	STATE	PROJECT	SUBSET NO.	SHEET NO.
8	UT	UT PFH 39-1(2) SEVENMILE GOOSEBERRY	X132	133

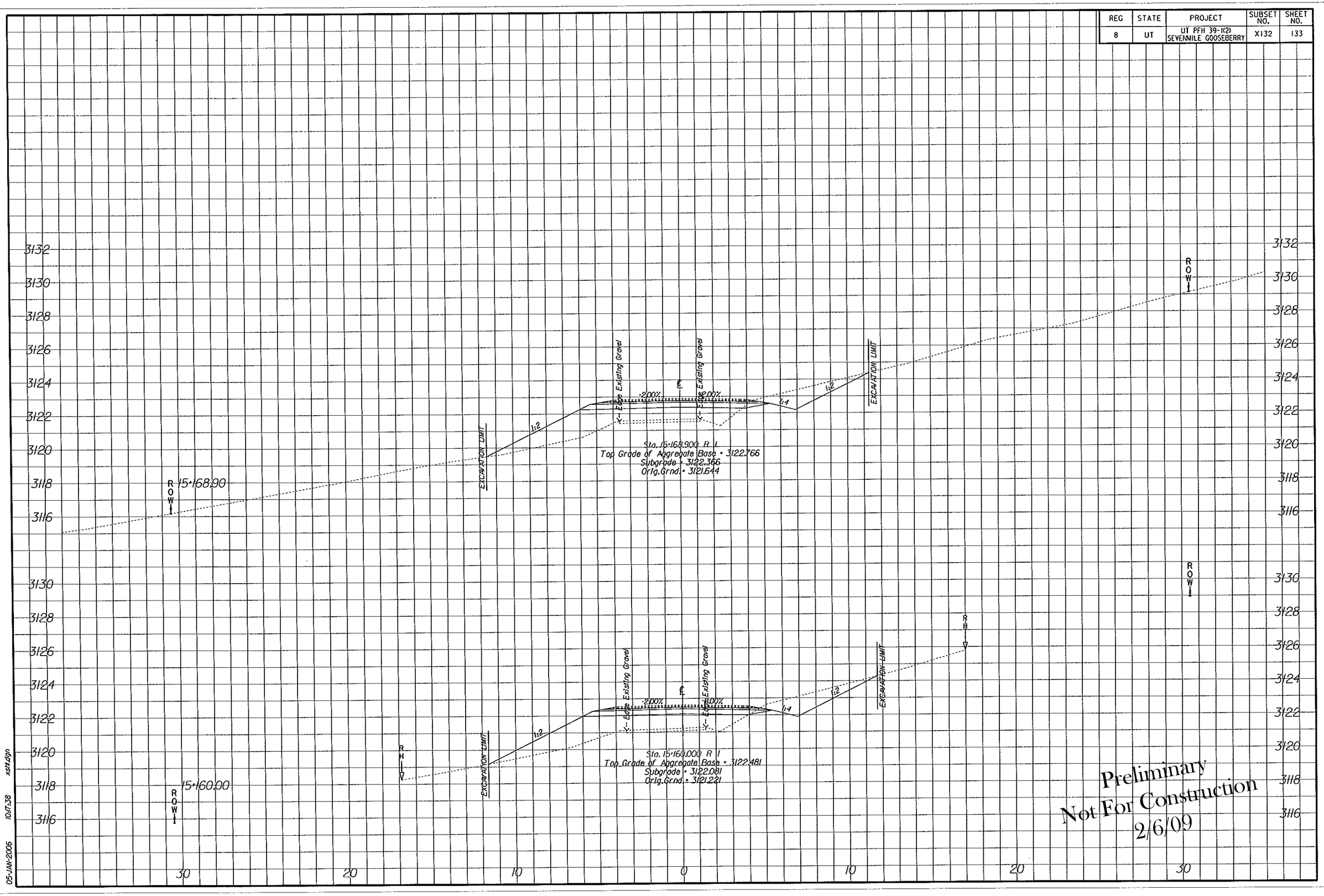

Preliminary
Not For Construction
2/6/09

05-JAN-2006 10:17:38 xsht.dgn

REG	STATE	PROJECT	SUBSET NO.	SHEET NO.
8	UT	UT PFH 39-1(2) SEVENMILE GOOSEBERRY	X133	134

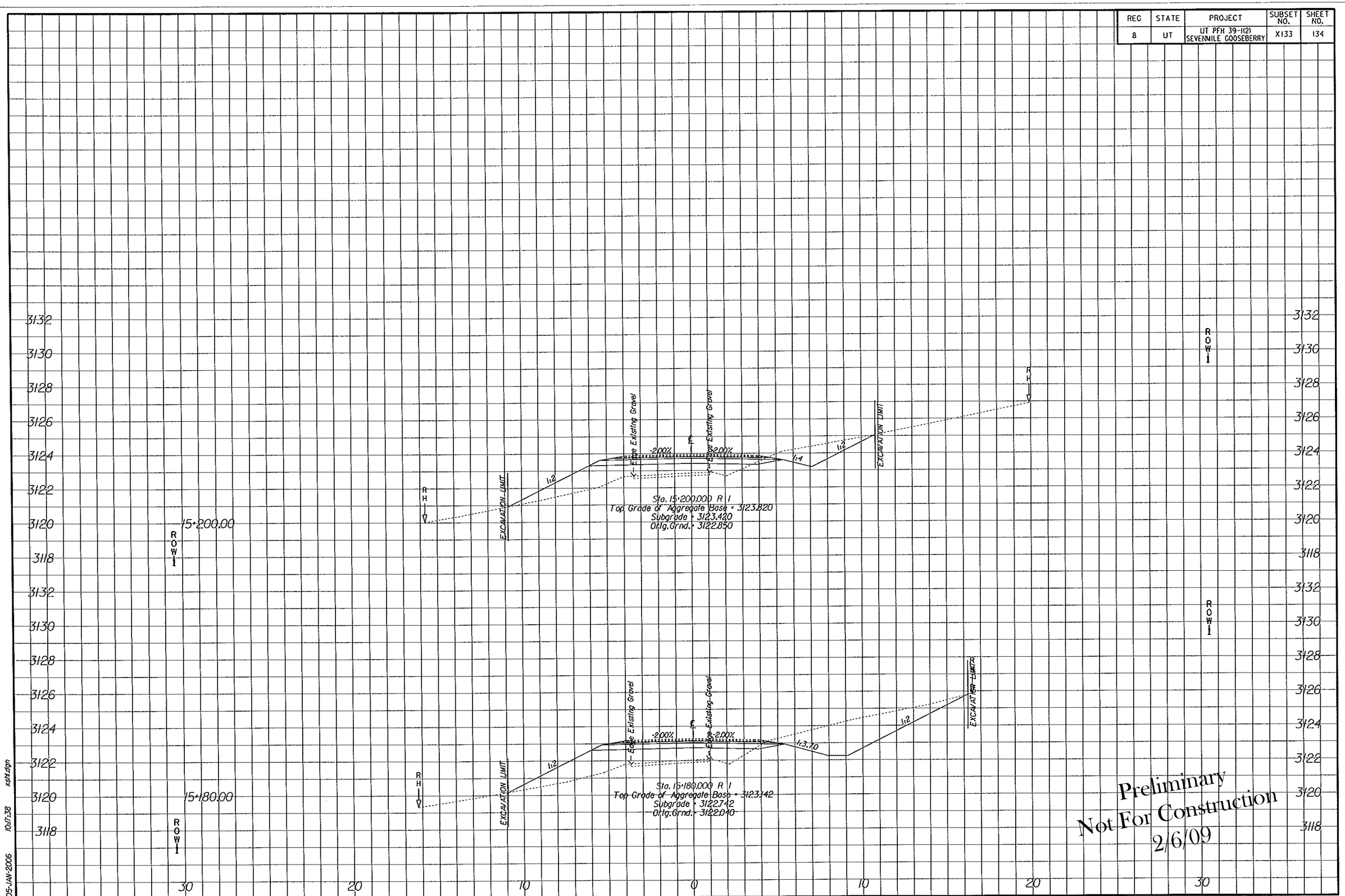

Preliminary
Not For Construction
2/6/09

05-JAN-2006 10:17:38 xsh.dgn

REG	STATE	PROJECT	SUBSET NO.	SHEET NO.
8	UT	UT PFH 39-1(2) SEVENMILE GOOSEBERRY	X134	135

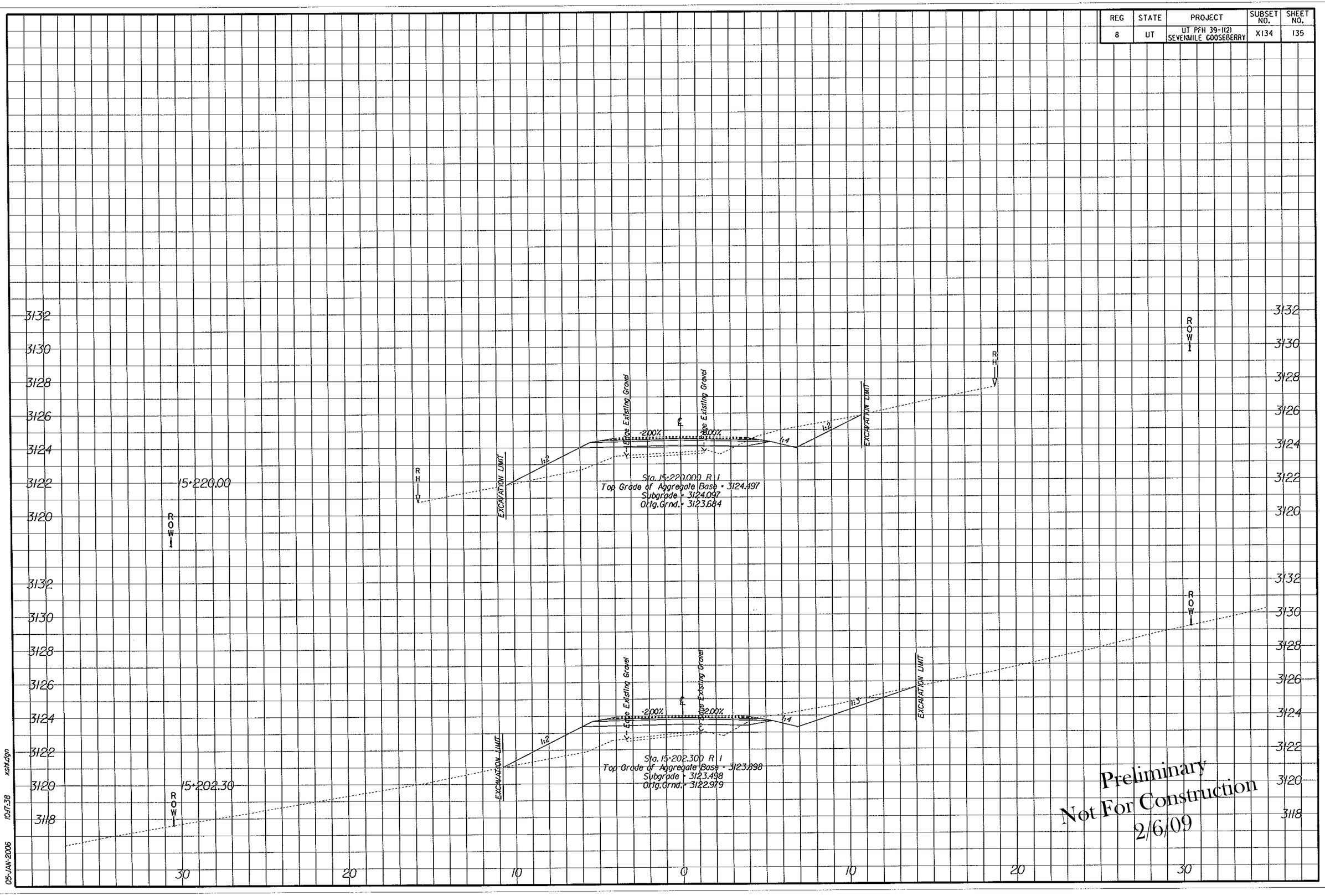

Preliminary
Not For Construction
2/6/09

xsht.dgn 10:17:38 05-JAN-2006

REG	STATE	PROJECT	SUBSET NO.	SHEET NO.
8	UT	UT PFH 39-1(2) SEVENMILE GOOSEBERRY	X135	136

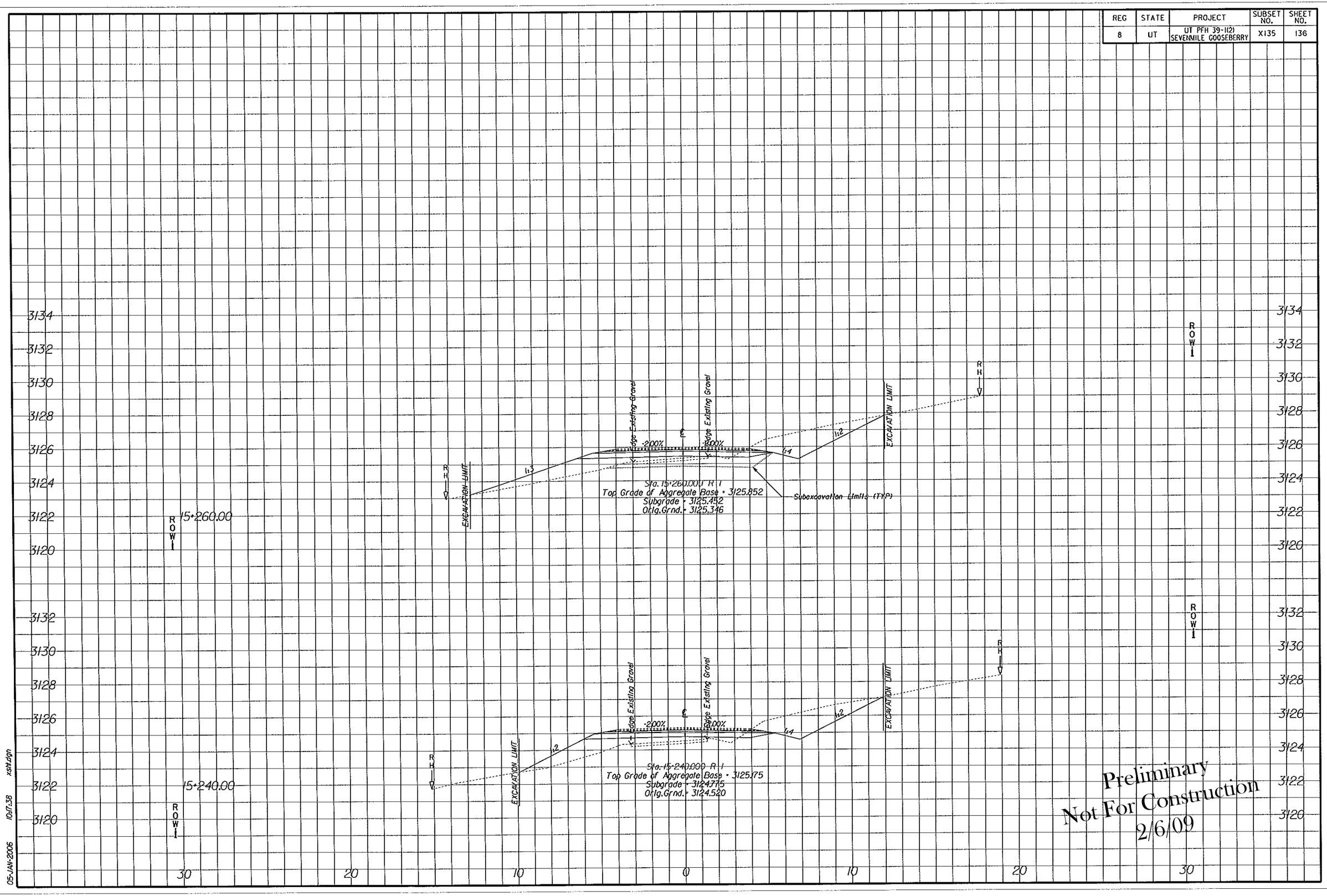

Preliminary
Not For Construction
2/6/09

05-JAN-2006 10:17:38 xsht.dgn

REG	STATE	PROJECT	SUBSET NO.	SHEET NO.
8	UT	UT PFH 39-1(2) SEVENMILE GOOSEBERRY	X136	137

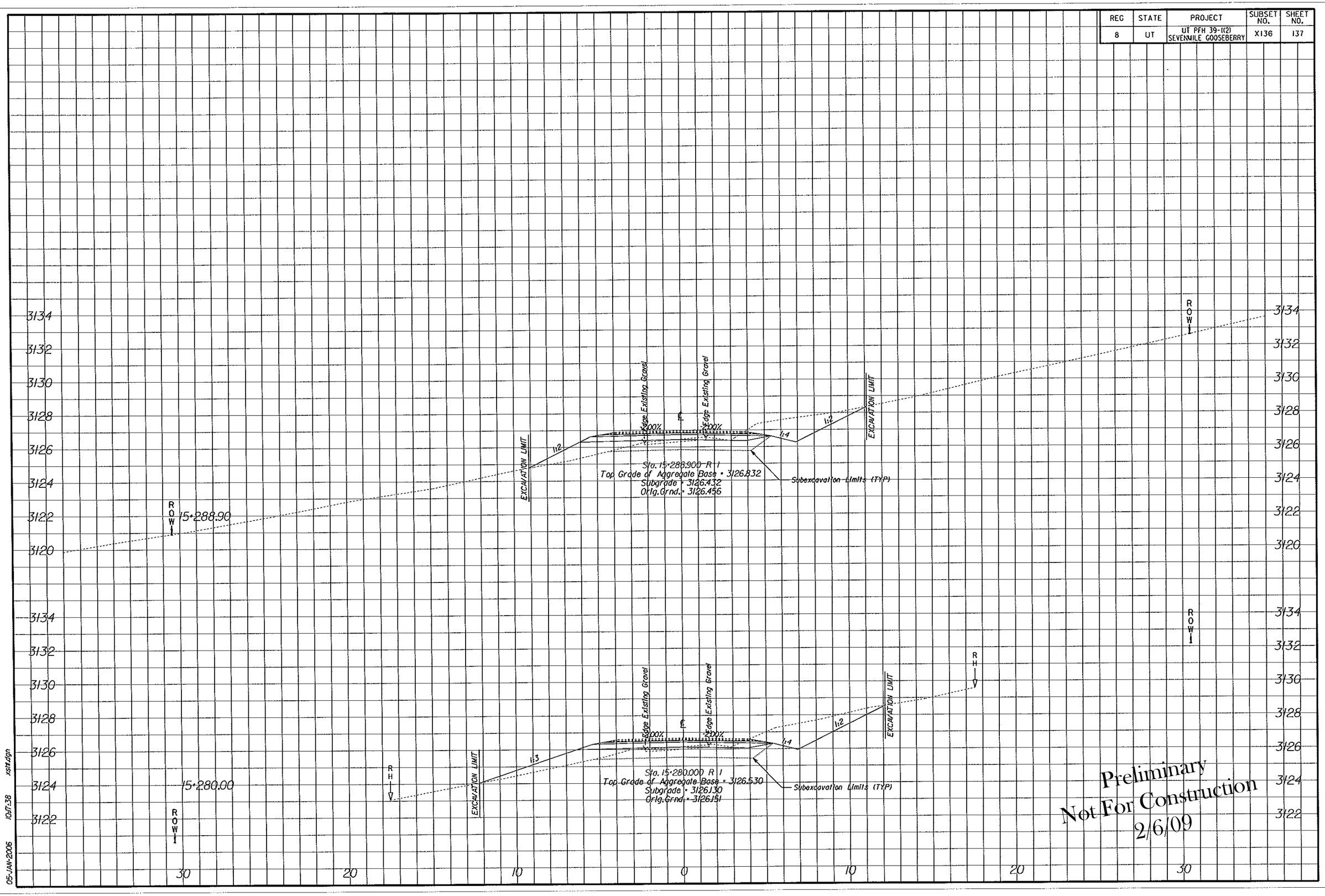

Preliminary
Not For Construction
2/6/09

05-JAN-2006 10:11:58 xsht.dgn

REG	STATE	PROJECT	SUBSET NO.	SHEET NO.
8	UT	UT PFH 39-1(2) SEVENMILE GOOSEBERRY	X137	138

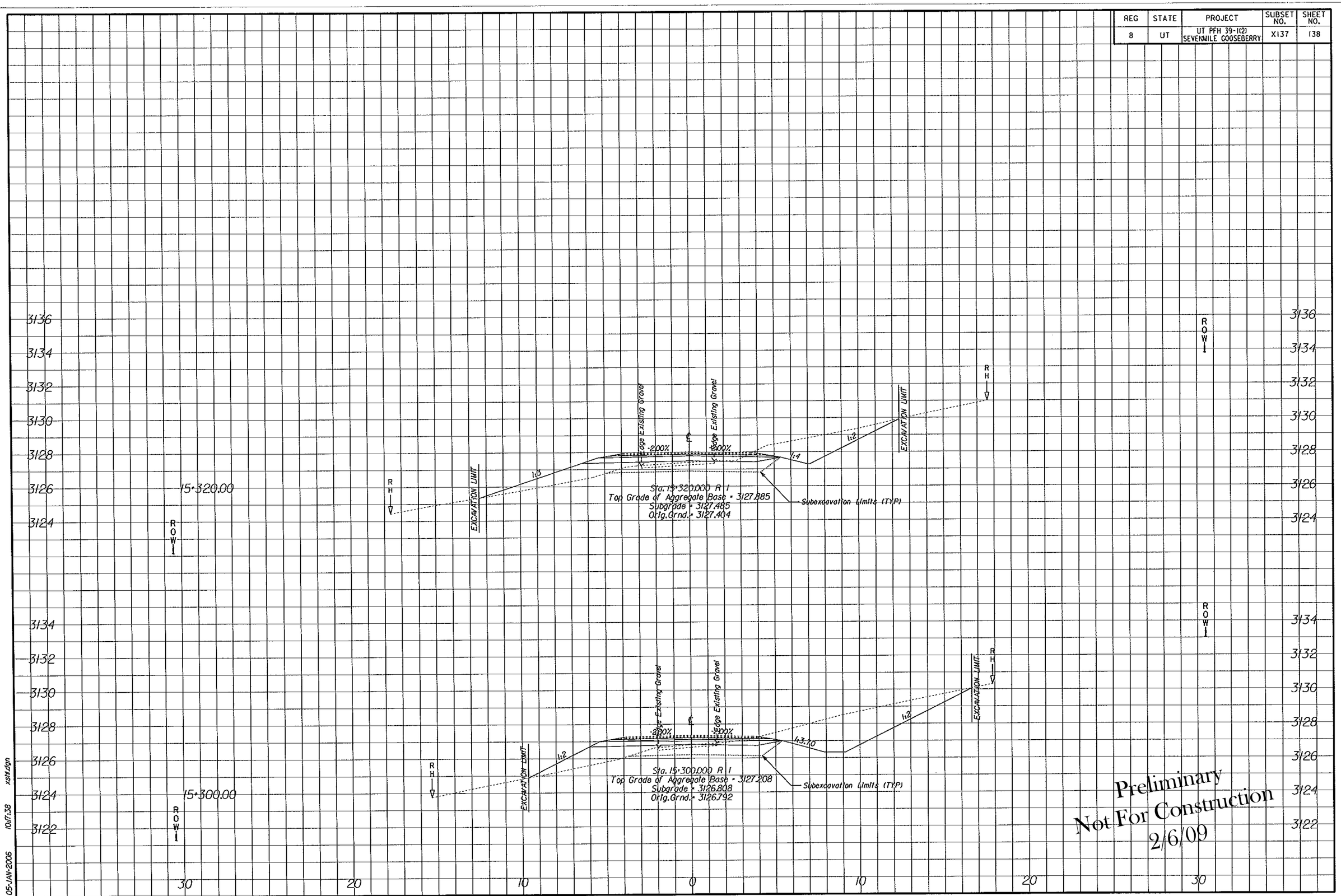

Preliminary
Not For Construction
2/6/09

05-JAN-2006 10:17:38 xsht.dgn

REG	STATE	PROJECT	SUBSET NO.	SHEET NO.
8	UT	UT PFH 39-1(2) SEVENMILE GOOSEBERRY	X138	139

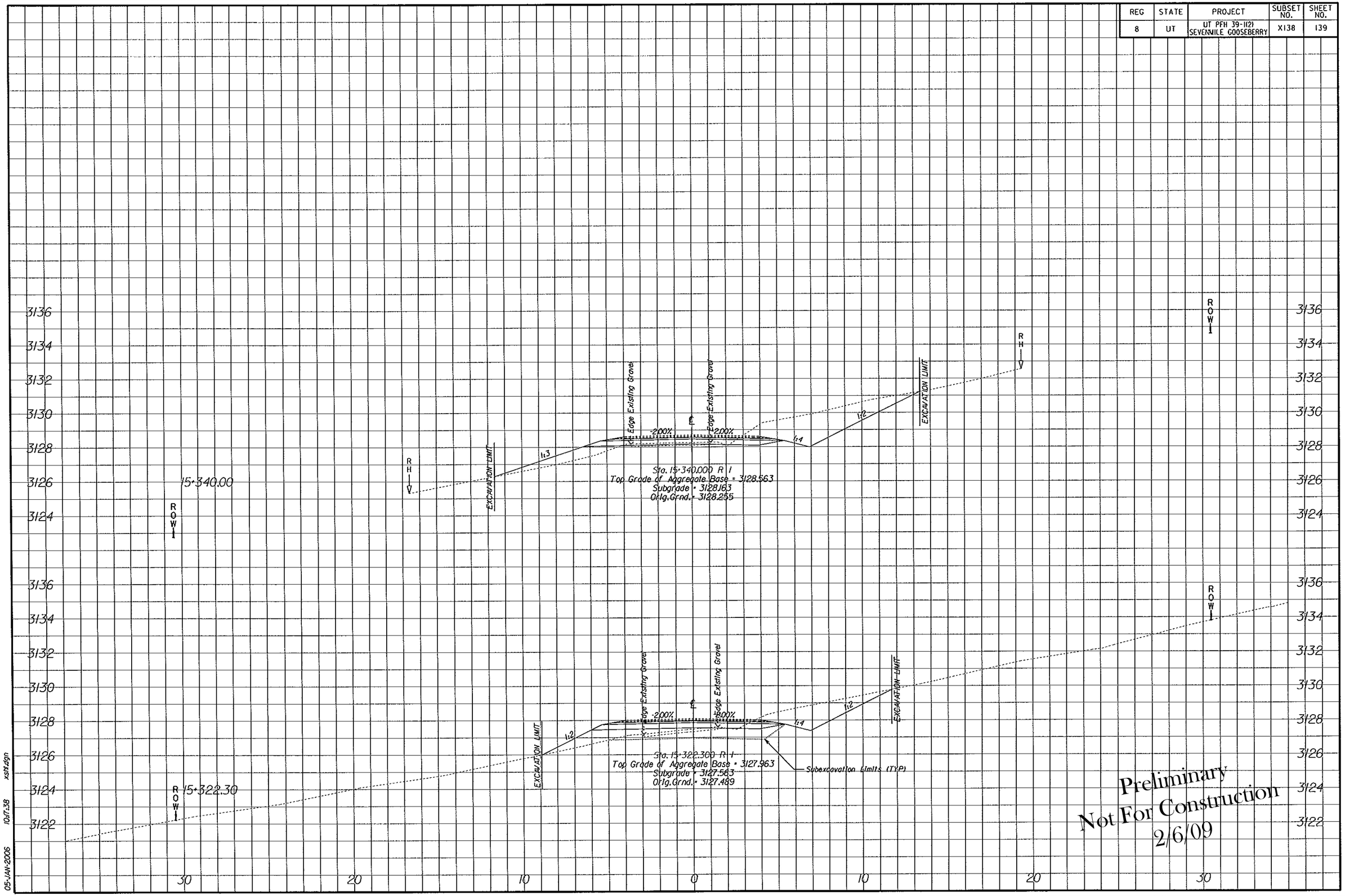

Preliminary
Not For Construction
2/6/09

05-JAN-2006 10:17:38 xsht.dgn

REG	STATE	PROJECT	SUBSET NO.	SHEET NO.
8	UT	UT PFH 39-1(2) SEVENMILE GOOSEBERRY	X139	140

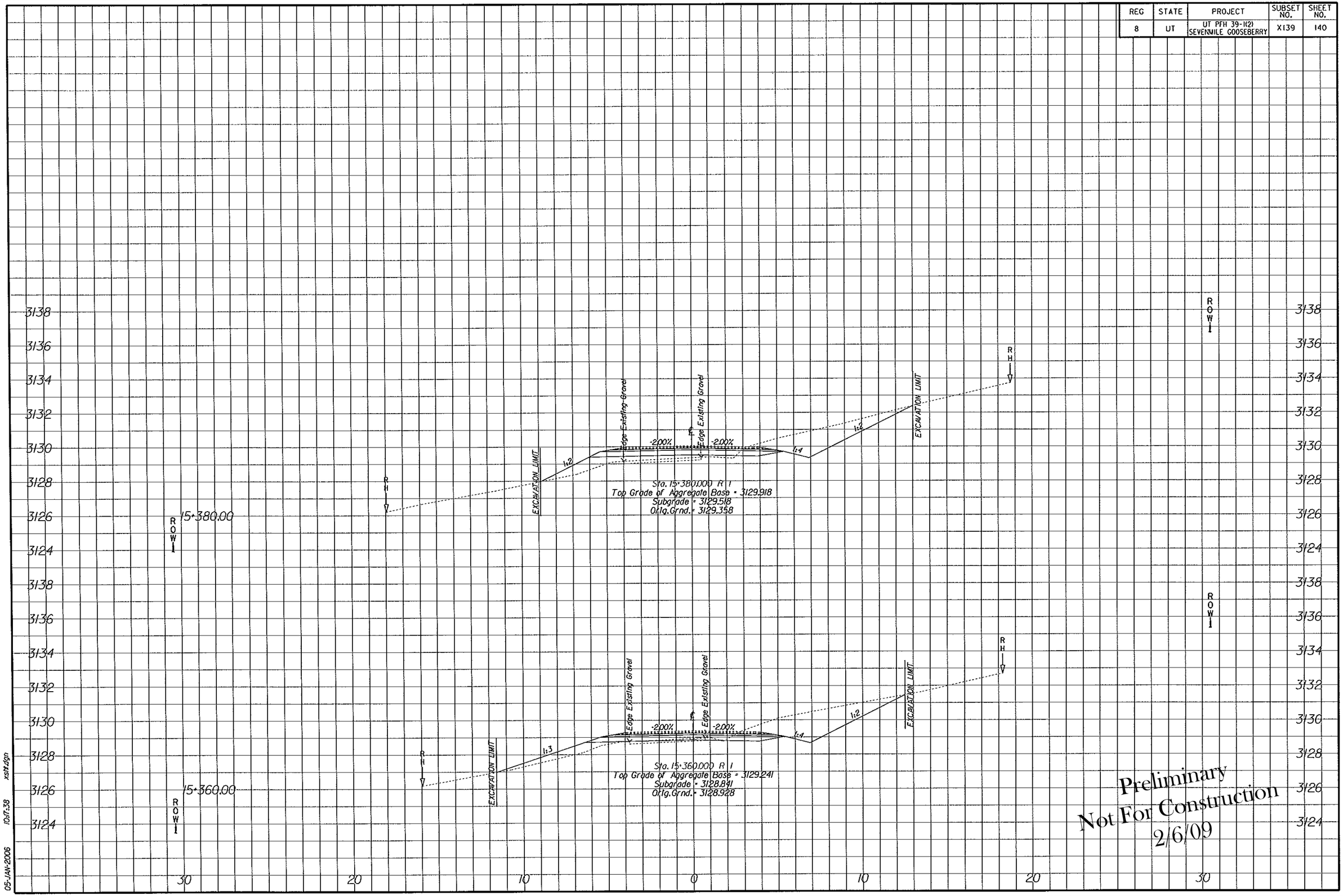

Preliminary
Not For Construction
2/6/09

05-JAN-2006 10:17:38 xsht.dgn

REG	STATE	PROJECT	SUBSET NO.	SHEET NO.
8	UT	UT PFH 39-1(2) SEVENMILE GOOSEBERRY	X140	141

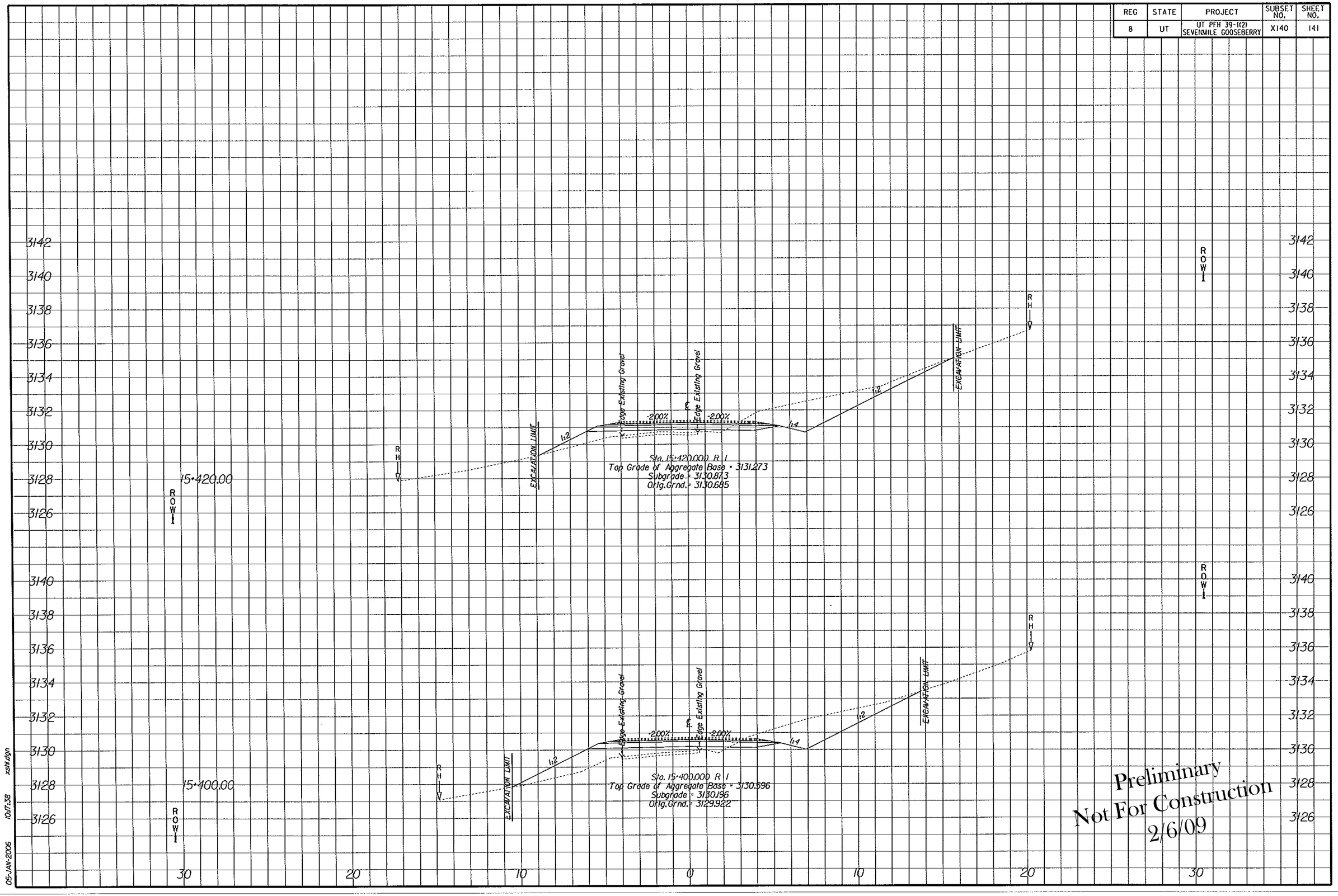

Preliminary
Not For Construction
2/6/09

05-JAN-2006 10:17:38 xsht.dgn

REG	STATE	PROJECT	SUBSET NO.	SHEET NO.
8	UT	UT PFH 39-1(2) SEVENMILE GOOSEBERRY	X141	142

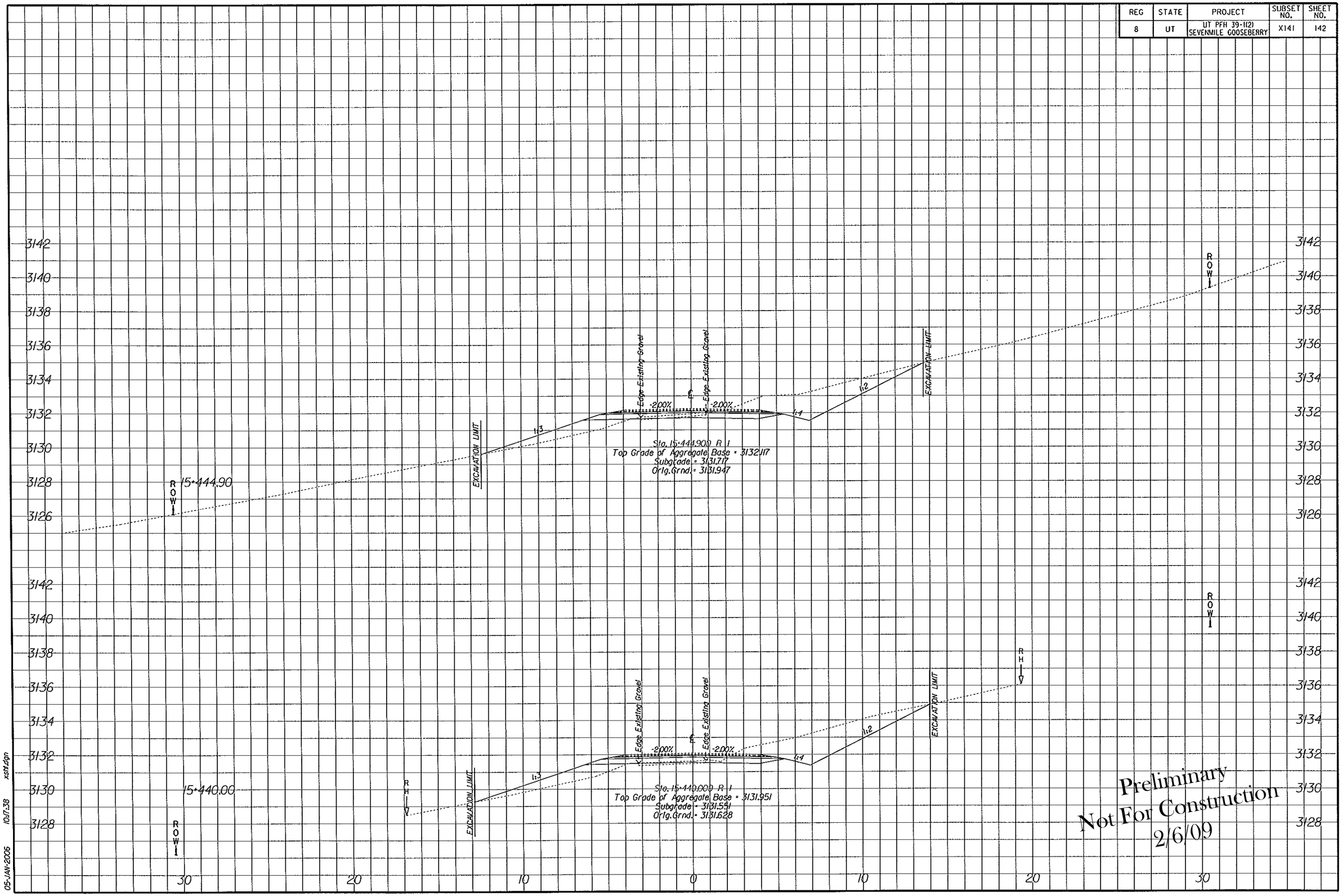

Preliminary
Not For Construction
2/6/09

05-JAN-2006 10:17:38 xs141.dgn

REG	STATE	PROJECT	SUBSET NO.	SHEET NO.
8	UT	UT PFH 39-1(2) SEVENMILE GOOSEBERRY	X142	143

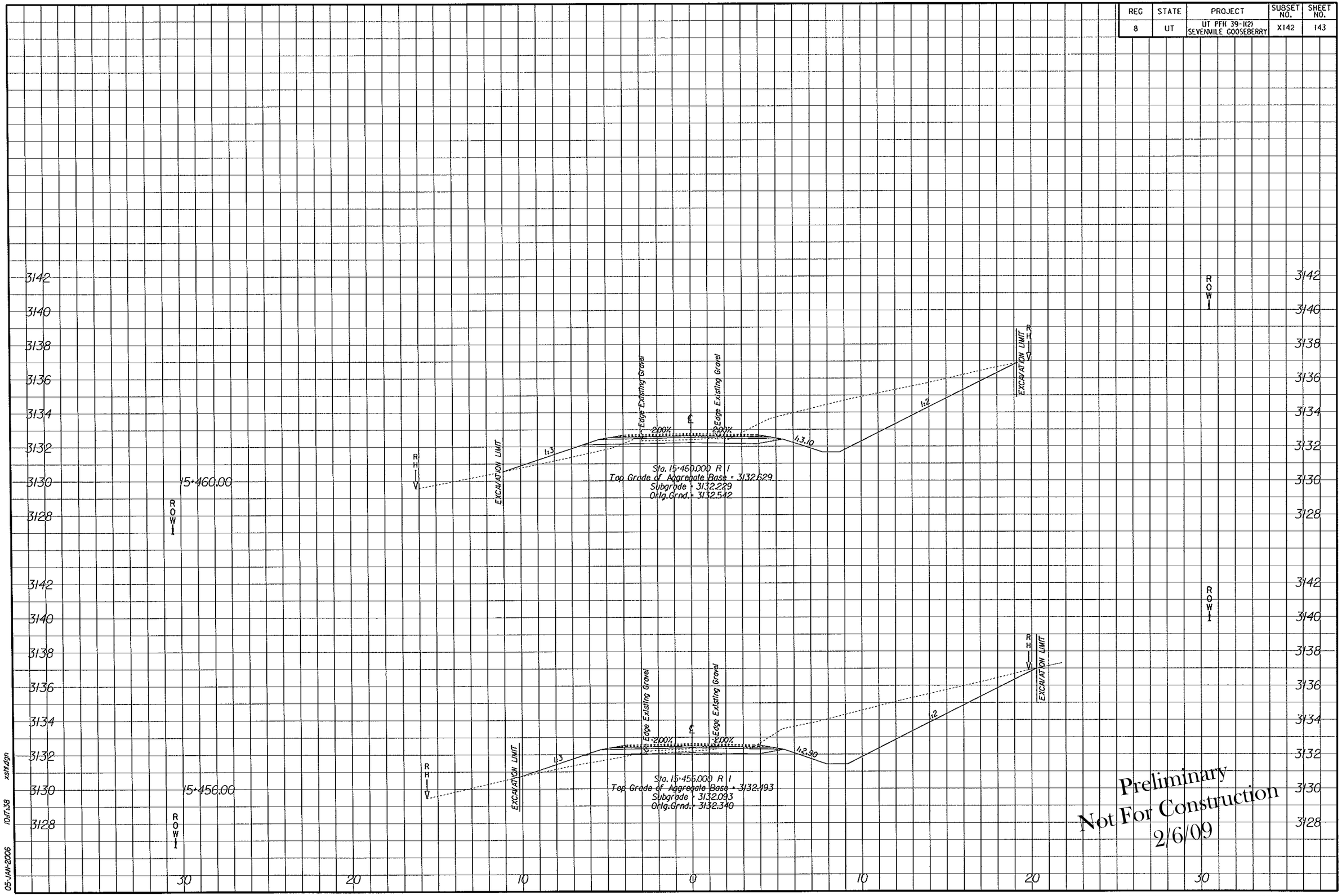

Preliminary
Not For Construction
2/6/09

REG	STATE	PROJECT	SUBSET NO.	SHEET NO.
8	UT	UT PFH 39-1(2) SEVENMILE GOOSEBERRY	X143	144

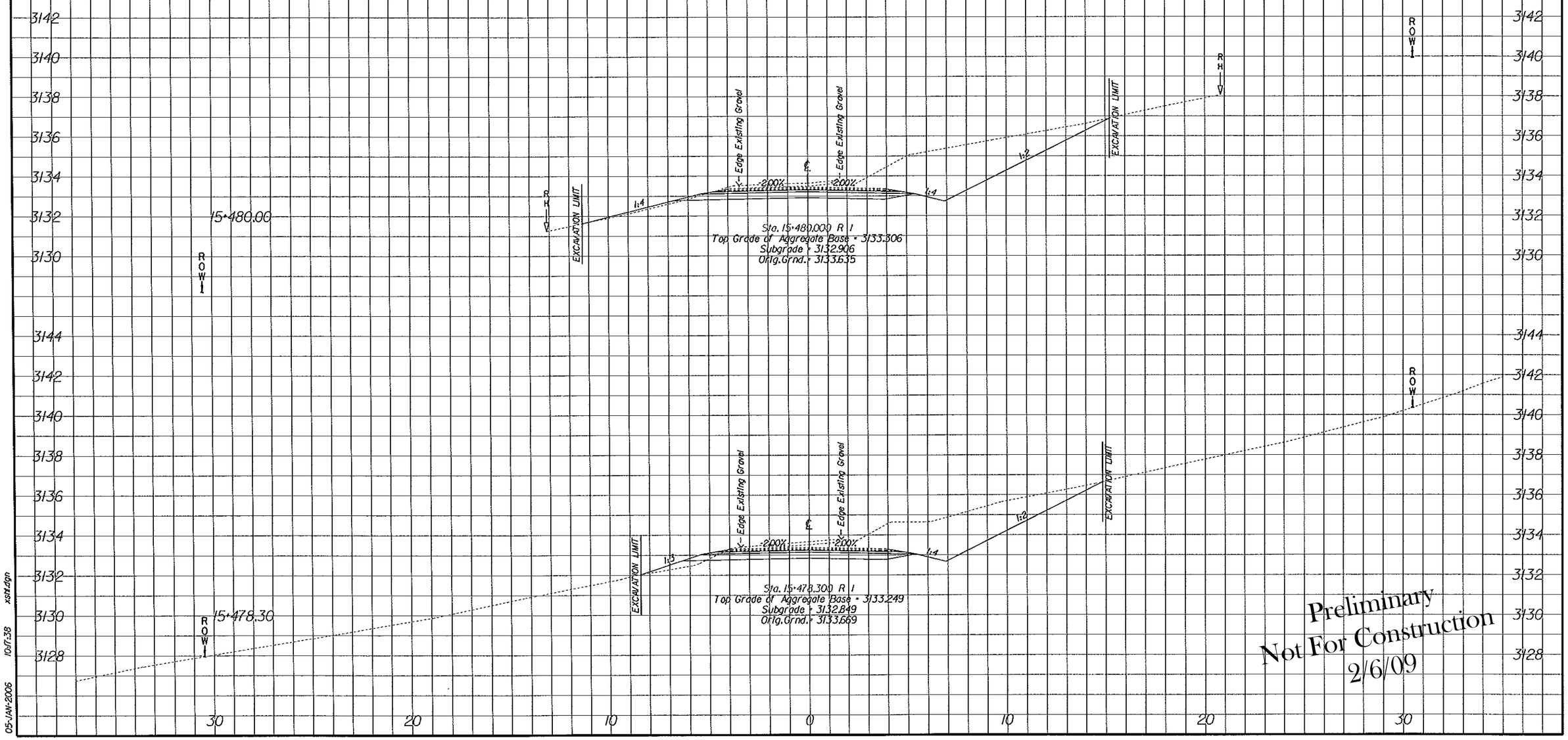

05-JAN-2006 10:17:38 xsrt.dgn

REG	STATE	PROJECT	SUBSET NO.	SHEET NO.
8	UT	UT PFH 39-1(2) SEVENMILE GOOSEBERRY	X144	145

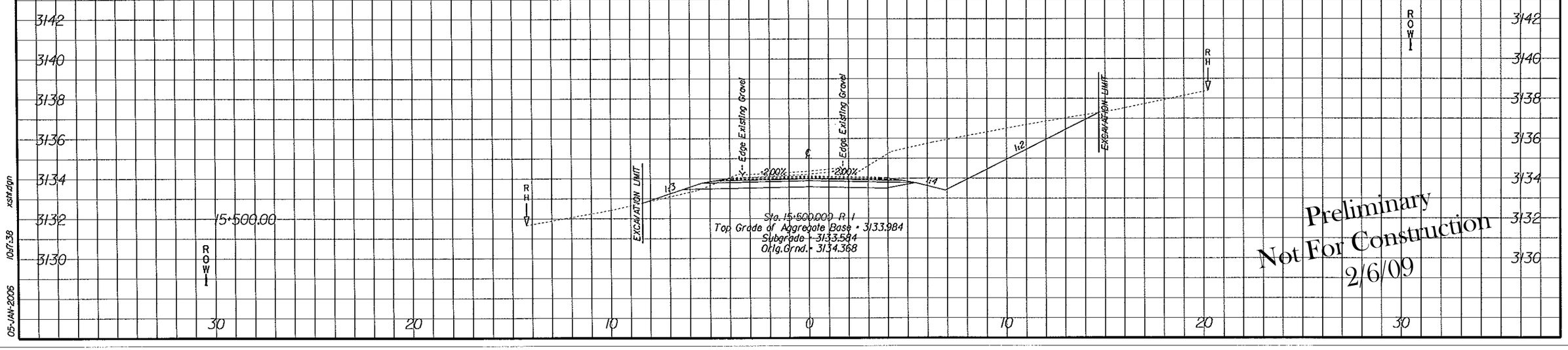

Preliminary
Not For Construction
2/6/09

05-JAN-2006 10:17:38 xsht.dgn