AMENDMENT OF SOLICITATION/MODIFICATION OF CONTRACT

1. CONTRACT ID CODE	PAGE	OF PAGES
	1	2

2. AMENDMENT/MODIFICATION NO.	3. EFFECTIVE DATE	4. REQUISITION/PURCHASE REQ. NO.	5. PROJECT NO. *(If applicable)*
0002	09/09/2004		AZ-NV HPP 93(3)

6. ISSUED BY CODE 6905001

FEDERAL HIGHWAY ADMINISTRATION
CENTRAL FEDERAL LANDS HIGHWAY DIVISION
12300 WEST DAKOTA AVENUE, SUITE 167
LAKEWOOD, COLORADO 80228

7. ADMINISTERED BY *(If other than Item 6)* CODE

8. NAME AND ADDRESS OF CONTRACTOR *(No., street, county, State and ZIP Code)*

CODE FACILITY CODE

(✓) ✔

9A. AMENDMENT OF SOLICITATION NO.
AZ-NV HPP 93(3), Hoover Dam Colorado River Bridge

9B. DATED *(SEE ITEM 11)*
06/08/2004

10A. MODIFICATION OF CONTRACT/ORDER NO.

10B. DATED *(SEE ITEM 13)*

11. THIS ITEM ONLY APPLIES TO AMENDMENTS OF SOLICITATIONS

✔ The above numbered solicitation is amended as set forth in Item 14. The hour and date specified for receipt of Offers ☐ is extended, ✔ is not extended.

Offers must acknowledge receipt of this amendment prior to the hour and date specified in the solicitation or as amended, by one of the following methods:

(a) By completing Items 8 and 15, and returning 1 copies of the amendment; (b) By acknowledging receipt of this amendment on each copy of the offer submitted; or (c) By separate letter or telegram which includes a reference to the solicitation and amendment numbers. FAILURE OF YOUR ACKNOWLEDGMENT TO BE RECEIVED AT THE PLACE DESIGNATED FOR THE RECEIPT OF OFFERS PRIOR TO THE HOUR AND DATE SPECIFIED MAY RESULT IN REJECTION OF YOUR OFFER. If by virtue of this amendment you desire to change an offer already submitted, such change may be made by telegram or letter, provided each telegram or letter makes reference to the solicitation and this amendment, and is received prior to the opening hour and date specified.

12. ACCOUNTING AND APPROPRIATION DATA *(If required)*

13. THIS ITEM APPLIES ONLY TO MODIFICATIONS OF CONTRACTS/ORDERS, IT MODIFIES THE CONTRACT/ORDER NO. AS DESCRIBED IN ITEM 14.

(✓) A. THIS CHANGE ORDER IS ISSUED PURSUANT TO: *(Specify authority)* THE CHANGES SET FORTH IN ITEM 14 ARE MADE IN THE CONTRACT ORDER NO. IN ITEM 10A.

☐ B. THE ABOVE NUMBERED CONTRACT/ORDER IS MODIFIED TO REFLECT THE ADMINISTRATIVE CHANGES *(such as changes in paying office, appropriation date, etc.)* SET FORTH IN ITEM 14, PURSUANT TO THE AUTHORITY OF FAR 43.103(b).

☐ C. THIS SUPPLEMENTAL AGREEMENT IS ENTERED INTO PURSUANT TO AUTHORITY OF:

☐ D. OTHER *(Specify type of modification and authority)*

E. IMPORTANT: Contractor ☐ is not, ☐ is required to sign this document and return _____ copies to the issuing office.

14. DESCRIPTION OF AMENDMENT/MODIFICATION *(Organized by UCF section headings, including solicitation/contract subject matter where feasible.)*

See attached SF30 continuation sheet for summary of changes. All changes are revised effective 09/09/2004.

NOTE:
The bid opening will be held in Room 160 at the address specified on Page A-1, Block 8, of the Invitation for Bid. Be advised that entrance to the building will require security check-in. It is the bidder's responsibility to allow adequate time for this process in order to submit bids. Security personnel are NOT authorized to accept bids. Bids must be received by an authorized Government official no later than 2 p.m. on September 16, 2004.

FAILURE TO ACKNOWLEDGE THIS AMENDMENT BY THE DESIGNATED DATE AND HOUR SPECIFIED ABOVE MAY RESULT IN REJECTION OF YOUR BID (REFER TO ITEM 11.)

Except as provided herein, all terms and conditions of the document referenced in Item 9A or 10A, as heretofore changed, remains unchanged and in full force and effect.

15A. NAME AND TITLE OF SIGNER *(Type or print)*		16A. NAME AND TITLE OF CONTRACTING OFFICER *(Type or print)*	
15B. CONTRACTOR/OFFEROR *(Signature of person authorized to sign)*	15C. DATE SIGNED	16B. UNITED STATES OF AMERICA BY _____ *(Signature of Contracting Officer)*	16C. DATE SIGNED

PREVIOUS EDITION UNUSABLE

STANDARD FORM 30 (Rev. 10-83)
Prescribed by GSA
FAR (48 CFR) 53.243

Save Data Only | Clear Form | Save Data & Form

SF30 CONTINUATION SHEET Item 14 Description of Amendment/Modification
AMENDMENT #2

----------Invitation for Bid----------

Remove Page I-42 and replace with new Page I-42. Revised quantities for 55401 and 58001 in Table under Section 109.10.

Remove Page I-51 and replace with new Page I-51. Clarification on optional hairpin turn survey work included in miscellaneous survey under Section 152.05.

Remove Page I-112 and replace with new Page I-112. Added solid portions of cast-in-place concrete columns in Section 552.10(e).

Remove Page I-213 and replace with new Page I-213. Third sentence of Section 638.05(d) revised.

Remove Page I-214 and replace with new Page I-214. Added text to the end of Section 638.05(e) (2).

Remove Pages I-218 and I-219 and replace with new Pages I-218, I-219 and I-219A. Sections 638.10(1) and (2) testing requirements revised.

Remove Page I-223 and replace with new Page I-223. Third sentence of Section 639.05(d)(2) revised.

Remove Pages I-228 and I-229 and replace with new Pages I-228, I-229 and I-229A. Sections 639.10(1) and (2) testing requirements revised.

----------Plan Sheets----------

Remove Sheet 304 and replace with new Sheet 304. Added Notes designated by revision symbol Î.

Partial payments for material will not exceed the lesser of:

(a) 80 percent of the contract bid price for the item, or
(b) 100 percent of amount supported by copies of invoices submitted.

The quantity paid will not exceed the corresponding quantity estimated in the contract.

Full or partial progress payment may be withheld until a construction schedule or schedule update is submitted to and accepted by the CO.

Partial payments for stockpiled manufactured material (aggregates) will be based on contractor process control test results. If test results show the material to be out-of-specification, or in "reject" where statistical evaluation procedures are used, no payment for stockpiled materials will be made.

109.09 Final Payment. Delete the first sentence and substitute the following:

FAR Clause 52.232-5, Payment under Fixed-Price Construction Contracts, and FAR Clause 52.232-27 - Prompt Payment for Construction Contracts are supplemented as follows:

Add the following Subsection:

109.10 Steel Material Cost Indexing

Payments or deductions taken will be made to the Contractor for fluctuations in the cost of steel materials in the following pay items:

Item No.	Bid Item	Basis Quantity (lbs)
55401	REINFORCING STEEL	***2496600*** ~~280550~~
55507A	STRUCTURAL STEEL GRADE 70W, FURNISHED, FAB'D & DELIVERED	721200
55501C	STRUCTURAL STEEL, BOX GIRDERS FURNISHED, FAB'D AND ERECTED	6148300
55501D	STRUCTURAL STEEL ACCESS PLATFORMS FURNISHED, FAB'D AND ERECTED	74800
56203	TEMPORARY WORKS (FOR CONCRETE ARCH ERECTION)	***3209200*** ~~3500000~~
58001	CONCRETE ARCH	3073500
58101	PRECAST OR CAST- IN- PLACE CONCRETE SPANDREL COLUMNS	2046700
58201	PRECAST OR CAST- IN- PLACE CONCRETE APPROACH SPAN COLUMNS	1114900
63812A	ROCK ANCHORS, SKEWBACK	38000
63812B	ROCK ANCHORS, FOOTINGS	10800
63910	TIEBACK ANCHORS	20000
63812C	ROCK ANCHOR, CONTINGENCY (at 5.4 lb per ft)	

Payments or deductions will only be made for fluctuations in the material cost of the steel used in these items. No adjustments will be made for changes in the cost of manufacturing, fabrication, shipping, storage, or any other element of supply for finished products. The basis of price adjustment will be the quantity of steel, in pounds, listed in the above estimated quantity for each respective item. Steel quantity in bid item 56203 will be made for actual material quantities used for temporary works, not to exceed the basis quantity noted above.

Miscellaneous survey and staking will be measured by the hour for all CO ordered survey.

Measure miscellaneous survey and staking for drainage structures, pedestrian walkway grading, slope staking, roadway grading, optional US93 hairpin widening ***(monuments only),*** and pedestrian walkway rock anchor walls by the hour.

Measure installation of monuments at US93 hairpin turn and monument survey according to Section 621.

Payment

152.06 Add the following:

Pay Item	Pay Unit
15205B Bridge Survey and Staking, Arch Layout	Lump Sum

Section 153. - CONTRACTOR QUALITY CONTROL

Construction Requirements

153.02 Contractor Quality Control Plan.

(a) Process control testing. Add the following:

See Table 153-1 for schedule of minimum sampling and testing for process control. Where no minimums are specified, submit proposed tests to be performed and the proposed sampling and testing frequencies.

For aggregates and/or aggregate/asphalt mixtures accepted under Subsection 106.03, sample and test for conformity with the Certification a minimum of one time per pay item.

(b) Inspection/control procedures.

(3) Production phase. Add the following:

(d) Inspect materials or assemblies accepted under Subsection 106.03 to ensure that the work and materials comply with all contract requirements. Furnish the results of the inspection, along with the product certification or commercial certification as applicable, to the CO prior to incorporating the materials into the work.

(c) Description of records. Add the following:

Identify the format for reporting test results and the procedures to be used to maintain inspection records.

Add the following:

(e) Mass Concrete

Portions of structure are mass concrete (ref ACI 207), including pier footings, pier caps, ***solid portions of cast-in-place concrete columns,*** skewback footings and arch diaphragms. Refer to Section 552A for additional requirements for arch and pier cap concrete. Include modeling (analysis), temperature control and monitoring during placement of mass concrete elements.

The sum of the Tricalcium Silicate and Tricalcium Aluminate in cement used for mass concrete shall not exceed 58 percent in accordance with the optional chemical requirements of ASTM C 150. The water to cementitious materials ratio for mass concrete shall not exceed the values for w/c specified in table 552A-1.

Use either Type A, D, F or G admixture conforming to the requirements of ASTM C 494. Use admixture at such dosage that it will not cause an increase in drying shrinkage of the mass concrete in excess of that permitted in ASTM Designation C 494.

Do not exceed concrete temperature of 90°F at time of discharge from the mixer except when ice is substituted for 100 percent of the mixing water, in which case do not exceed 75° F. Assure that when ice is used, all the ice is melted before discharging the concrete from the mixer.

After the mass concrete pour has been topped out and finished it shall be revibrated and refinished. Revibration shall extend below the top mat of reinforcement and shall be done as late as the concrete will again respond to vibration. For concrete pours without top reinforcement, revibration shall extend to a depth of 6 inches.

Control the internal and surface temperature of mass concrete during curing to control thermal cracking due to heat generation and dissipation. Control the maximum internal temperature of the mass concrete once placed so maximum does not exceed 155°F. Control the maximum temperature difference between any surface of the mass concrete and the hottest portion in accordance with the cracking criteria established in the Thermal Control Plan of this Section.

The concrete temperature shall be monitored by thermocouples placed into the concrete, as required in “Thermal Control Plan” of these SCRs. Use ice, liquid nitrogen, insulated curing blankets, insulated forms, cooling pipes and other measures as necessary to satisfy the temperature requirements.

(1) Thermal Control Plan: For each mass concrete structure component, prior to commencing any mass concrete placement, submit a Thermal Control Plan to the CO for approval. Include the length and method of curing, procedures to control maximum concrete temperature at time of placement, report of thermal modeling, temperature sensor types and locations, data acquisition method, proposed method of controlling temperature differentials, and provisions for field measures to ensure meeting the maximum concrete temperature and temperature differentials requirements.

Allow 7 days for acceptance or rejection of submittals. Do not begin work until submittals have been approved.

Construction Requirements

638.05 Rock Anchor Tendon.

(a) General. Fabricate the tendons in either the shop or field as indicated on the Plans. Size the tendon such that:

(1) The design/lock-off load does not exceed 60 percent of the specified ultimate tensile strength of the tendon; and

(2) The maximum test load does not exceed 80 percent of the minimum specified ultimate tensile strength of the tendon.

(b) Bond length. The bond length necessary to develop the design/lock-off load and satisfy requirements of both proof and performance testing shall be determined by the Contractor. The minimum required bond length is specified on the Plans.

(c) Corrosion protection. Provide double corrosion protection as follows:

Full length of tendon (unbonded plus bond lengths): Sheathing consisting of corrugated polyvinyl chloride (PVC) tubes or corrugated high-density polyethylene (HDPE) tubing with end caps. The inside diameter of the corrugated sheathing shall be a nominal 0.4 inch greater than the nominal bar diameter. The tendon shall be centralized within the sheathing and the annular space between tendon and sheathing fully grouted before installation.

Unbonded length of tendon: Smooth outer sheathing consisting of polyethylene tube, extruded polypropylene tube, or extruded high-density polyethylene (HDPE) tube, or plastic pipe. Provide non-structural filler grout within the annular space between the drill hole wall and the outer smooth sheathing, along the unbonded length of the tendon.

(d) Centralizers and spacers. Provide the following:

Centralizers shall be designed to ensure a minimum of 0.5 inch of grout cover over the bond length encapsulating sheathing, and shall be sized so as not to impede the free flow of grout up the drill hole. Position centralizers so their center-to-center spacing does not exceed 5 feet. Locate the uppermost centralizer ***within the bond length*** not more than 5 feet from the upper end of the bond length. Locate the lowermost centralizer not more than 1 foot from the anchor tip (tip of bond length).

(e) Anchorage. The stressing anchorage shall consist of steel bearing plate, washers (flat hardened, beveled and/or spherical as required) and nut. The stressing anchorage shall be capable of developing 95 percent of the ultimate tensile strength of the tendon when tested in an unbonded state. Provide the following:

(1) Bearing plate. Size the bearing plate such that:

The maximum bending stresses in the bearing plate do not exceed the yield strength of the plate steel when a load equal to 95 percent of the minimum specified ultimate tensile strength of the tendon is applied; and the average bearing stress in the bearing plate does not exceed that recommended in Subsection 3.1 of the Post Tensioning Institute (PTI) *Guide Specification for Post-Tensioning Materials (current edition).*

(2) Trumpet. The inside diameter of the trumpet shall be equal to or larger than the hole in the bearing plate, and the trumpet shall be of sufficient length to accommodate tendon movements during testing and stressing. Weld (seal weld) the trumpet to the bearing plate. Provide a permanent Buna-N synthetic rubber seal or an approved equal between the trumpet and the unbonded length smooth outer sheathing. ***For restressable tiebacks, fill the trumpet with corrosion-inhibiting grease. For non-restressable tiebacks, fill the trumpet with grout.***

(3) Anchorage cover. Provide a steel cover over the anchorage assembly. Bolt the cover to the bearing plate to permit removal of the cover and restressing of the rock anchor. Paint the cover in accordance with Section 563.

638.06 Storing and Handling. Handle and store tendons in a manner to avoid damage or corrosion. Protect tendons from dirt, mud, water, and other harmful substances. Do not use tendons that are corroded, pitted, damaged due to welding, or show evidence of abrasions, cuts, nicks, welds, weld splatter, corrosion or pitting. Repair or replace any tendons exhibiting damage to encapsulation or sheathing. Degrease the bond length of tendons and remove solvent residue before installation.

638.07 Installation. Drill rock anchor holes at the locations shown on the Plans. Locate drill holes within 1.0 foot of the specified location. For vertical excavation slopes, drill holes at an inclination of 15 degrees below horizontal at the anchor location. For ¼H:1V and flatter excavation slopes, drill holes perpendicular to the excavation slope face at the anchor location. Drill the longitudinal axis of the drill hole parallel to the longitudinal axis of the tendon, and within 3 degrees of the required inclination from horizontal. Install the rock anchor at a horizontal angle within 3 degrees of a line drawn perpendicular to the plane of the excavation slope.

Drill holes to a minimum diameter of three times the tendon diameter or to the minimum diameter specified by the grout or tendon manufacturer, and to a depth that will provide a minimum of one foot of open hole beyond the end of the specified rock anchor. Clean holes of all drill cuttings, sludge, and debris before the rock anchor is inserted into the hole. Do not use water or drilling slurry during drilling. Install the rock anchor within 12 hours of completing the drill hole. A maximum of 15 feet of unstabilized (unanchored) open vertical excavation shall be permitted for excavations which require stabilization as shown on the Plans.

Couple tendon sections together when standard, commercially available lengths are exceeded utilizing center-stop type couplers so that an equal length of thread connects each section. Provide couplers which achieve 100 percent of the manufacturer's guaranteed ultimate tensile strength for the tendon. Do not fabricate couplings in a manner which interfere with the flow of grout. Position approved centralizers on the tendon at a maximum spacing of 5 feet on-center.

Table 638-2
Performance Test

Test Sequence	Test Load Increment							
	AL	**0.25DL**	**0.50DL**	**0.75DL**	**1.00DL**	**1.25DL**	**1.33DL**	**Adjust to lock-off load (DL)**
1	X	X						
2	X	X	X					
3	X	X	X	X				
4	X	X	X	X	X			
5	X	X	X	X	X	X		
6	X	X	X	X	X	X	X	X

AL = Alignment load, DL = Design/lock-off load

Hold the maximum test load for a minimum of 10 minutes. Re-pump the jack as necessary in order to maintain a constant load. Begin the load-hold period as soon as the maximum test load is applied.

Measure and record the tendon movement at intervals of 1, 2, 3, 4, 5, 6, and 10 minutes. If the tendon movement between 1 and 10 minutes exceeds 0.04 inch, continue holding the maximum test load and record tendon movement at 15, 20, 25, 30, 45, and 60 minutes. If the load is held for 60 minutes, plot a creep curve showing the creep movements between one minute and 60 minutes as a function of the logarithm of time. Plot the tendon movement versus the maximum load and plot the residual movement of the tendon at each alignment load versus the highest previously applied load.

638.09 Tensioning & Lock off. Upon completion of the proof or performance test, reduce the load to the specified design/lock-off load (DL) and transfer the load to the anchorage. After transferring the load and before removing the jack, measure the lift-off load. If the lift-off load is not within 10 percent of the specified lock-off load, reset the anchorage and re-measure the lift-off load. Repeat as necessary. Tension the rock anchor to 100 percent of the specified design/lock-off load (1.0 DL).

After tensioning, lock-off the rock anchor at the specified design/lock-off load.

638.10 Acceptance. Material for rock anchors will be evaluated under Subsections 106.02 and 106.03.

Construction of rock anchors will be evaluated under Subsections 106.02 and 106.04.
Installed rock anchors will be accepted based on meeting the following proof or performance test results, as applicable:

~~(1)Proof test: The total movement at the maximum test load exceeds 80 percent of the theoretical elastic elongation of the unbonded length, and ***or*** the creep movement at the maximum test load between 1 and 10 minutes is less than 0.04 inch.~~

~~(2)erformance test: The total movement at the maximum test load exceeds 80 percent of the theoretical elastic elongation of the unbonded length, and the creep rate at the maximum test load between 1 and 60 minutes is less than 0.08 inch/log cycle of time for the last log cycle.~~

(1) Proof test: The total movement at the maximum test load exceeds 80 percent of the theoretical elastic elongation of the unbonded length. The creep movement at the maximum test load between 1 and 10 minutes is less than 0.04 inch, or the creep rate between 1 and 60 minutes is less than .08 inches per log cycle of time for the maximum test load.

(2) Performance test: The total movement at the maximum test load exceeds 80 percent of the theoretical elastic elongation of the unbonded length. The creep movement at the maximum test load between 1 and 10 minutes is less than .04 inch, or the creep rate at the maximum test load between 1 and 60 minutes is less than 0.08 inch/log cycle of time for the last log cycle of maximum test load.

If a rock anchor fails during performance or proof testing, modify the design or construction procedures, subject to review and approval by the CO. These modifications may include changing the drilling or grouting procedures, reducing the rock anchor design/lock off load, by increasing the number of rock anchors over that specified on the Plans, increasing the tendon or drill hole diameter, or increasing the bond length. Any modifications of the design or construction procedures shall be installed and tested as previously defined at no additional cost to the Government. Any changes or modifications to the type or method of installation of rock anchors may require additional load testing as directed by the CO. A rock anchor which fails in load testing (performance or proof test) shall be replaced at no cost to the Government.

638.11 Records. The Contractor shall provide the Government with the following records:

(1) Record drawings which depict the location of the rock anchors, total anchor lengths, bond lengths and unbonded lengths.

(2) Tendon and stressing anchorage steel and grout verifications and/or mill reports.

(3) Grouting records indicating the cement type and quantity of grout used.

(4) Load test results.

Measurement

638.12 Measure rock anchors by the lineal foot from lower end of unbonded free length to back of the bearing plate, as shown on the Plans. Do not measure rock anchors not shown on the Plans or those not directed by the CO. Do not measure temporary rock anchors, anchors used for containment, wire mesh confinement, or other anchors used for construction.

Measure accepted rock anchor performance tests by the each.

No separate measurement will be made for proof tests.

Payment

638.13 The accepted quantities, measured as provided above, will be paid at the contract price per unit of measurement for the pay items listed below that are shown in the bid schedule. Payment will be full compensation for the work prescribed in this Section. See Subsection 109.05.

Unbonded length of tendon: Encapsulate each individual tendon element within a smooth high-density polyethylene (HDPE) or polyvinyl chloride (PVC) sheath filled with corrosion-inhibiting grease. Completely coat the unbonded length and fill the spaces between individual elements of the multi-element tendon with corrosion-inhibiting grease, and provide seals or other measures to prevent grease from escaping at the ends of the sheath. Encapsulate the multi-element tendon in corrugated inner sheathing and smooth PVC or HDPE outer sheathing. Provide non-structural grout filler within the annular space between the drill hole wall and the outer smooth sheathing, along the unbonded length of the tendon.

(d) Centralizers and spacers. Provide the following:

(1) Multi-element type tendon only. Use spacers along the bond length to separate the individual elements of the tendon. Spacers shall be sized to permit the free flow of grout up the drillhole, and shall be designed to provide adequate grout cover (minimum of 0.5 inch) and bond of the tendon elements to the surrounding grout.

(2) Multi-element and bar-type tendons. Centralizers shall be designed to ensure a minimum of 0.5 inch of grout cover over the tendon bond length encapsulating sheathing, and shall be sized so as to not impede the free flow of grout up the borehole. Position centralizers so their center-to-center spacing does not exceed 5 feet. Locate the uppermost centralizer ***within the bond length*** not more than 5 feet from the top of the tendon bond length. Locate the lowermost not more than 1 foot from the tip of the tendon (tip of bond length).

(e) Anchorage. The stressing anchorage shall consist of either a steel bearing plate with wedge plate and wedges, or a steel bearing plate, washers (flat hardened, beveled and/or spherical as required) and nut. The steel bearing plate and wedge plate may also be combined into a single element. The stressing anchorage shall be capable of developing 95 percent of the ultimate tensile strength of the tendon when tested in an unbonded state. Provide the following:

(1) Bearing plate. Size the bearing plate such that:

The maximum bending stresses in the bearing plate do not exceed the yield strength of the steel when a load equal to 95 percent of the minimum specified ultimate tensile strength of the tendon is applied; and

The average bearing stress in the bearing plate does not exceed that recommended in Subsection 3.1 of the Post Tensioning Institute (PTI) *Guide Specification for Post-Tensioning Materials (current edition).*

(2) Trumpet. The inside diameter of the trumpet shall be equal to or larger than the hole in the bearing plate, and the trumpet shall be of sufficient length to accommodate tendon movements during testing and stressing. For multi-element tendons with encapsulating sheathing over the unbonded length, provide a trumpet of sufficient length to enable the tendon to make a transition from the diameter of the tendon in the unbonded length to the diameter of

Table 639-2
Performance Test

Test Sequence	Test Load Increment							
	AL	0.25DL	0.50DL	0.75DL	1.00DL	1.25DL	1.33DL	Adjust to lock-off load (DL)
1	X	X						
2	X	X	X					
3	X	X	X	X				
4	X	X	X	X	X			
5	X	X	X	X	X	X		
6	X	X	X	X	X	X	X	X

AL = Alignment load, DL = Design/lock-off load

Hold the maximum test load for a minimum of 10 minutes. Re-pump the jack as necessary in order to maintain a constant load. Begin the load-hold period as soon as the maximum test load is applied.

Measure and record the tendon movement at intervals of 1, 2, 3, 4, 5, 6, and 10 minutes. If the tendon movement between 1 and 10 minutes exceeds 0.04 inches, continue holding the maximum test load and record tendon movement at 15, 20, 25, 30, 45, and 60 minutes.

Plot the tendon movement versus the maximum load and plot the residual movement of the tendon at each alignment load versus the highest previously applied load.

639.09 Tensioning & Lock off. Upon completion of the proof or performance test, reduce the load to the specified design/lock-off load (DL) and transfer the load to the anchorage. After transferring the load and before removing the jack, measure the lift-off load. If the lift-off load is not within 10 percent of the specified lock-off load, reset the anchorage and re-measure the lift-off load. Repeat as necessary. Tension the tieback to 100 percent of the specified design/lock-off load (1.0 DL).

After tensioning, lock-off the tieback at the specified design/lock-off load.

639.10 Acceptance. Material for tiebacks will be evaluated under Subsections 106.02 and 106.03.

Construction of tiebacks will be evaluated under Subsections 106.02 and 106.04.

Installed tiebacks will be accepted based on meeting the following proof or performance test results:

~~(1)Proof test: The total movement at the maximum test load exceeds 80 percent of the theoretical elastic elongation of the unbonded length, and ***or*** the creep movement at the maximum test load between 1 and 10 minutes is less than 0.04 inches.~~

~~(2)Performance test: The total movement at the maximum test load exceeds 80 percent of the theoretical elastic elongation of the unbonded length; the creep movement at the maximum test load between 1 and 10 minutes is less than 0.04 inches; and the creep rate at the maximum test load between 1 and 60 minutes is less than 0.08 inches/log cycle of time for the last log cycle.~~

(1) Proof test: The total movement at the maximum test load exceeds 80 percent of the theoretical elastic elongation of the unbonded length. The creep movement at the maximum test load between 1 and 10 minutes is less than 0.04 inch, or the creep rate between 1 and 60 minutes is less than .08 inches per log cycle of time for the maximum test load.

(2) Performance test: The total movement at the maximum test load exceeds 80 percent of the theoretical elastic elongation of the unbonded length. The creep movement at the maximum test load between 1 and 10 minutes is less than .04 inch, or the creep rate at the maximum test load between 1 and 60 minutes is less than 0.08 inch/log cycle of time for the last log cycle of maximum test load.

Replace all tiebacks with unacceptable performance or proof test results. Do not retest tiebacks which fail in load testing.

If a tieback fails during performance or proof testing, modify the design or construction procedures, subject to review and approval by the CO. These modifications may include changing the drilling or grouting procedures, increasing the tendon diameter, drill hole diameter or bond length. Any modifications of the design or construction procedure shall be installed and tested as previously defined at no additional cost to the Government. Any changes or modifications to the type or method of installation of tiebacks may result in additional load testing as directed by the CO. A tieback which fails in performance or proof testing shall be replaced at no cost to the Government.

639.11 Records. The Contractor shall provide the Government with the following records:

(1) Record drawings which show the location of the tiebacks, total tieback lengths, bond lengths and unbonded lengths.

(2) Tendon and stressing anchorage steel and grout verifications and/or mill reports.

(3) Grouting records indicating the cement type and quantity of grout used.

(4) Load test results.

Measurement

639.12 Measure permanent tieback anchors by the lineal foot from end of unbonded (free) length to the back of the bearing plate as shown on the Plans. Do not measure temporary tie backs or rock anchors required for construction or arch erection.

Measure accepted tieback anchor performance tests for permanent tiebacks by the each. Do not measure performance tests for temporary works tiebacks.

No separate measurement will be made for proof tests.

Payment

639.13 The accepted quantities, measured as provided above, will be paid at the contract price per unit of measurement for the pay items listed below that are shown in the bid schedule. Payment will be full compensation for the work prescribed in this Section. See Subsection 109.05.

REG	STATE	PROJECT	SHEET NO.	TOTAL SHEETS
9	AZ/NV	AZ/NV HPP93(3)	304	392

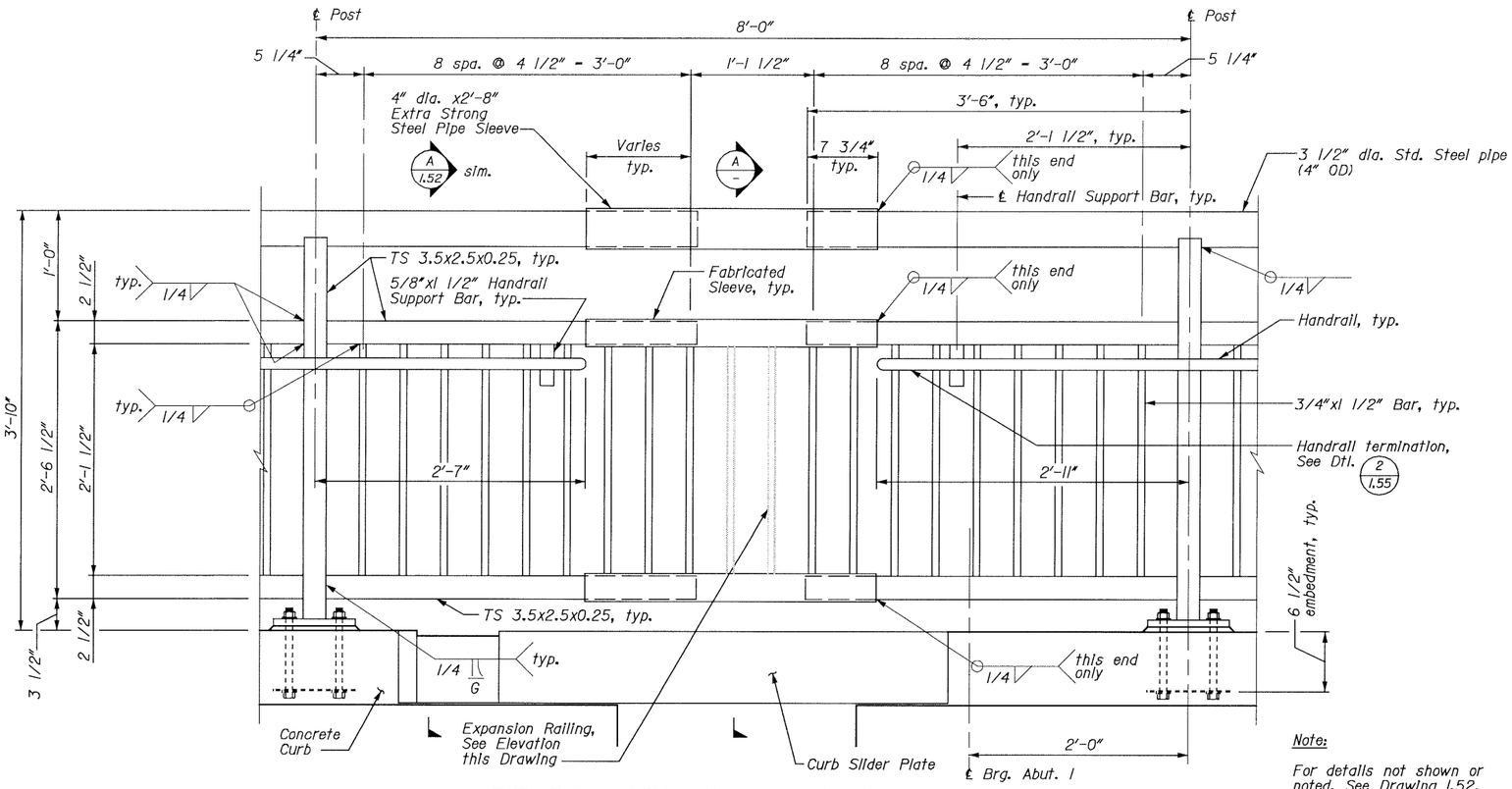

ELEVATION - PEDESTRIAN RAILING EXPANSION PANEL

(Abutment 1 shown, Abutment 2 similar)

Scale: 3/4"=1'-0"

Note:

For details not shown or noted, See Drawing 1.52.

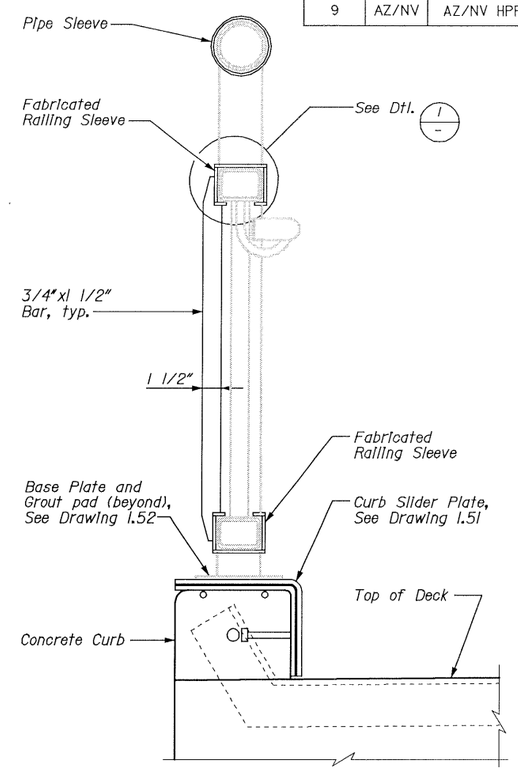

SECTION A –

Scale: 1"=1'-0"

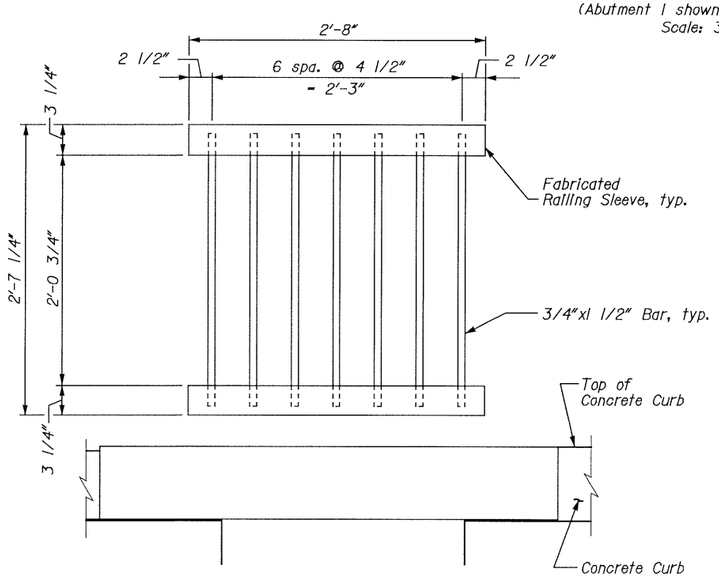

ELEVATION - EXPANSION RAILING

Scale: 3/4"=1'-0"

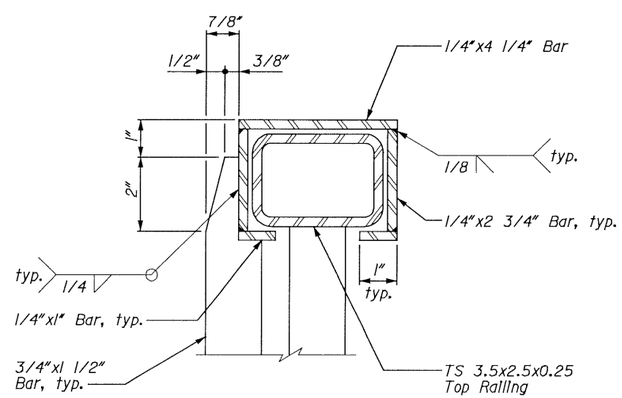

⚠ Notes:

1. Top Railing shown, Bottom Railing similar.
2. Provide 1/2" diameter drilled hole centered at low end of bottom Fabricated Railing Sleeve.

DETAIL 1 1.45 1 –

Scale: 3"=1'-0"

0 1 Inch

Pedestrian Railing Notes:

1. For General Notes, See Drawings A.04 thru A.06.
2. Steel tubing for pedestrian railing to conform to ASTM A500, Grade B or C or ASTM A501. Steel pipe to be ASTM A501 with Fy=36 ksi, ASTM A53, Type E or S, Grade B with Fy=35 ksi. All other structural steel to conform to M270, Grade 36.
3. Steel Posts and 3/4"x1 1/2" Bars are to be constructed plumb. All rails to be continuous unless noted otherwise.
4. Field splice locations shall be as approved by the CO.
5. Pedestrian Railing to be painted with a heat-resistant coating as approved by the CO, See SCR Section 563. Cost of Pedestrian Railing painting to be included in pay item 56301AB.
6. Contractor to submit complete shop drawings showing all details of the pedestrian railing for review by the CO.
7. ⚠ Top and bottom tube rails (TS 3.5x2.5) to have 1/8" end plates with seal welds at all expansion joints (abutments and intermediate locations).

PROFESSIONAL ENGINEER - STATE OF NEVADA
W. DAVID GOODYEAR
EXP. 6-30-05
CIVIL
No. 15457
9-7-04

T·Y·LIN INTERNATIONAL | HDR

U.S. DEPARTMENT OF TRANSPORTATION
FEDERAL HIGHWAY ADMINISTRATION
CENTRAL FEDERAL LANDS HIGHWAY DIVISION, DENVER, COLORADO

BOR - HOOVER DAM RESERVATION AREA
COLORADO RIVER BRIDGE
AT HOOVER DAM
ARIZONA/NEVADA
NDOT STRUCTURE NO. B2704
ADOT STRUCTURE NO. 2685

PEDESTRIAN RAILING DETAILS 2

NO.	DATE	BY	REVISIONS	NO.	DATE	BY	REVISIONS
1	9-09-04	RT	Added Note				

DESIGNED BY	DRAWN BY	CHECKED BY	SCALE	PROJECT TEAM LEADER	BRIDGE DRAWING	DATE	DRAWING NO.
K.Bormann	T.King	M.Bunner	AS NOTED	David Goodyear, PE	220 of 308	11-17-03	RG2741-1.53