2003 Midwestern States Hydraulic Engineers Conference

- August 2003 -

Itty P. Itty, Ph.D., P.E.
Senior Bridge Hydraulics Engineer
Arizona Department of Transportation

Contents of the Presentation

- An Update of the Scour Retrofit Status of State Bridges
- Common Countermeasures Being Used
  - Cornfield Canyon Bridge
  - Chinle Wash Bridge
- Lessons Learned
- Challenges Ahead

Scour Retrofit Update

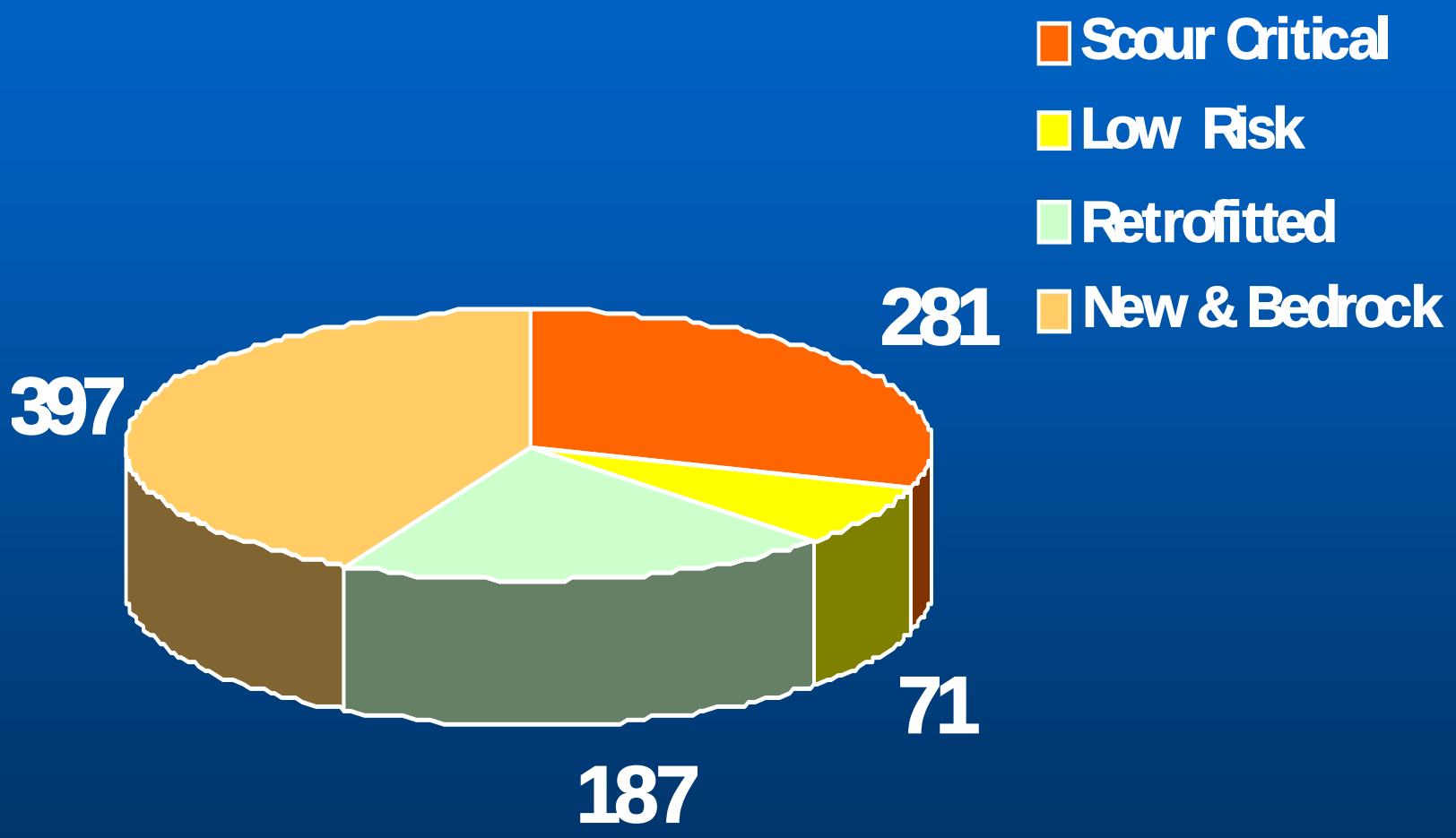

Cornfield Canyon Bridge I10
MP 299.14

F.H.W.A. REGION	STATE	PROJECT NO.	SHEET NO.	TOTAL SHEETS
9	ARIZ.	010-E-502		
		010 CH 299		

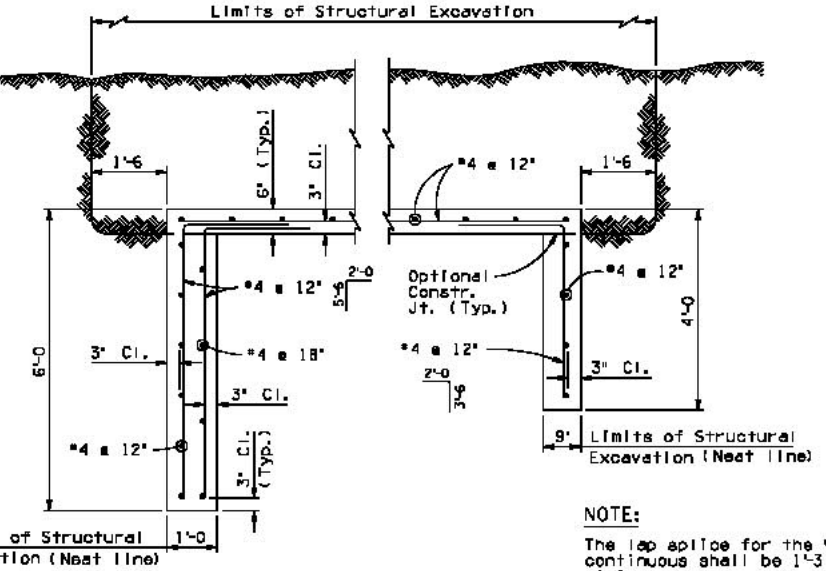

NOTE:

The lap splice for the #4 continuous shall be 1'-3 minimum.

SECTION 1
Scale: ¾" = 1'-0

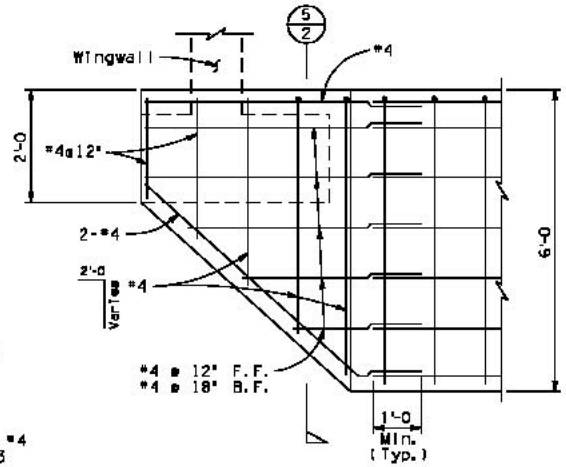

VIEW 2
Scale: ¾" = 1'-0

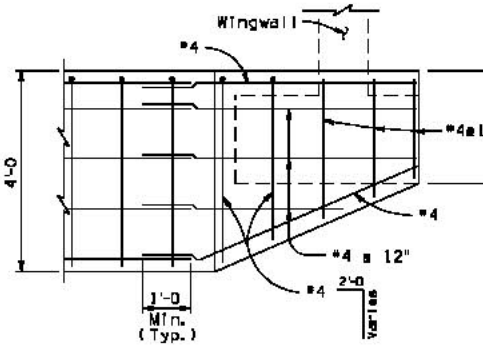

VIEW 3
Scale: ¾" = 1'-0

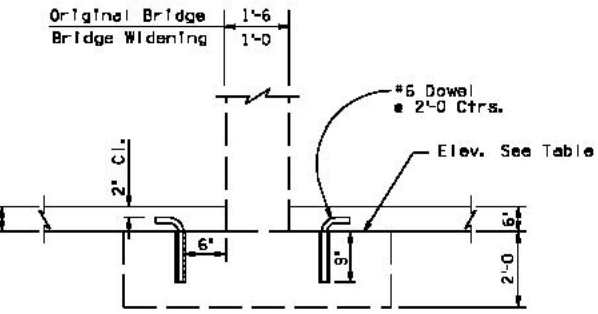

SECTION 4
No Scale

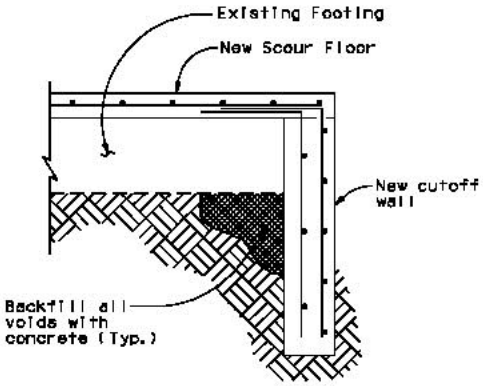

SECTION 5
Scale: ¾" = 1'-0

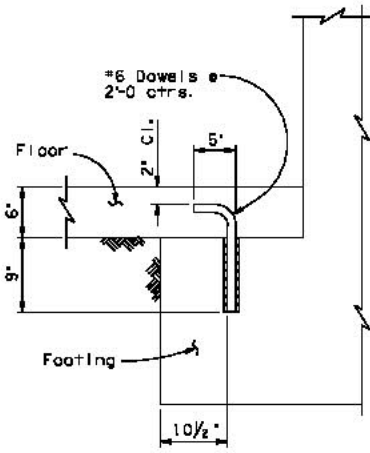

SECTION 6
No Scale

END:

le/Detail Marker (1) — Detail Number

tion Marker (1/2) — Section Number / Drawing Number

vation Marker (1/2) — Elevation Number / Drawing Number

TABLE	
Bottom of Ftg. @	Elev.
Abut. #1	4183.20
Pier #1	4183.08
Pier #2	4182.95
Pier #3	4182.82
Abut. #2	4182.70

BRIDGE DESIGN SECTION C		DATE
DESIGN	M. Sakhi	3/02
DESIGN CKD	C. Kharter	3/02
DRAWN	J. Waters	3/02
DRG CKD	C. Kharter	3/02
APPROVED-PROJ. ENGINEER	C. Kharter	3/02
APPROVED-DESIGN LEADER	S. Y. Hsu	3/02

ARIZONA DEPARTMENT OF TRANSPORTATION
INTERMODAL TRANSPORTATION DIVISION
BRIDGE GROUP

STA. 2108+
CORNFIELD CANYON BRIDGE WB
SCOUR PROTECTION DETAILS

I-10	299.14	0073
ROUTE	MILEPOST	STRUCTURE NO.

LOCATION
CORNFIELD CANYON BRIDGE, WB

TRACS NO. H 5993 01C | 010-E-502

- BENSON HWY (I-10 WB)
LD CANYON BRIDGE, WB
COUNTY

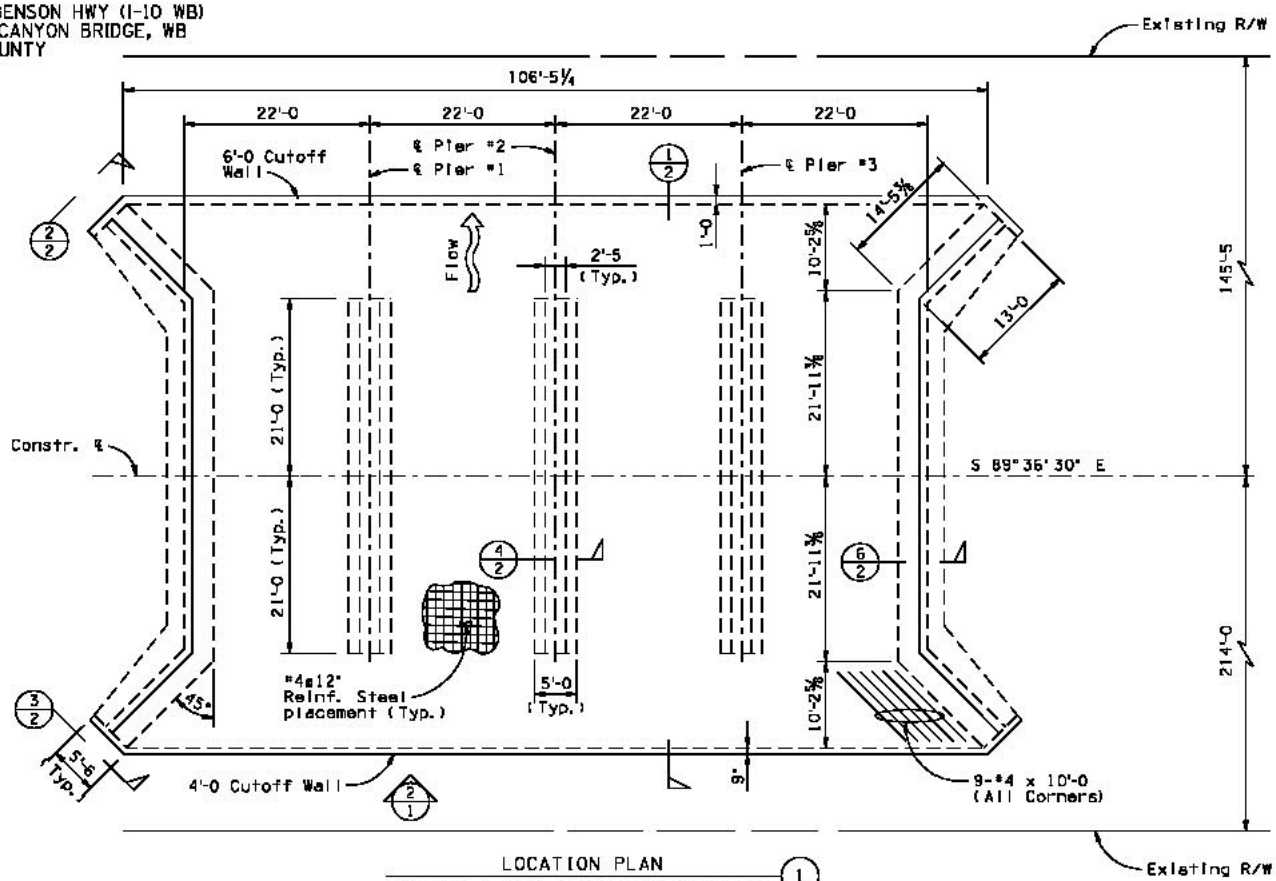

LOCATION PLAN (1)
Existing 4-Span Concrete Slab Bridge
0° Skew
Scale: ⅛" = 1'-0

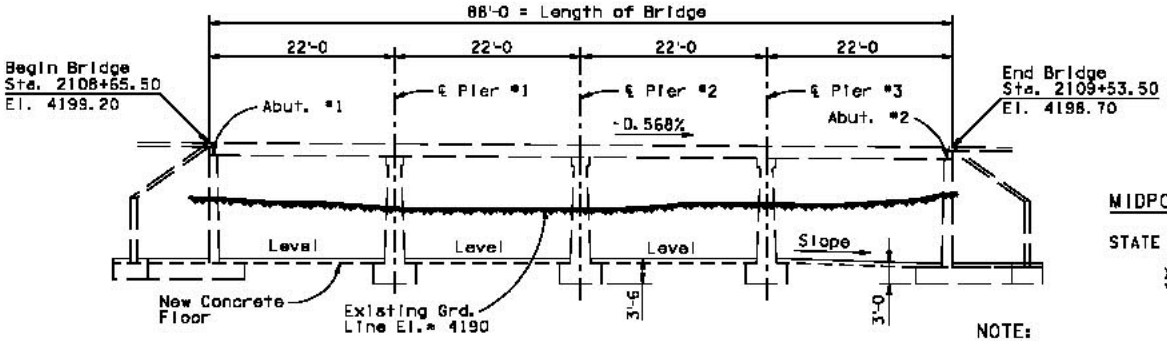

ELEVATION (2)
Scale: ⅛" = 1'-0

MIDPOINT OF PROJECT
EASTERN ZONE
STATE PLANE COORDINATES

X = 426742.00
Y = 350390.00

NOTE:

The existing ground line is based on bridge inspection report dated 1-17-01.

F.H.W.A. REGION	STATE	PROJECT NO.	SHEET NO.	TOTAL SHEETS
9	ARIZ.	010-E-502		

010 CH 299

GENERAL NOTES:

Construction Specification - Arizona Department of Transportation Standard Specifications for Road Bridge Construction, Edition of 2000.

Design Specifications - AASHTO Standard Specifications for Highway Bridg 16th Edition 1996 and 1997, 1998 and 1999 Interim Specifications.

All Concrete shall be Class "S" (f'c = 3000 psi).

Reinforcing steel shall conform to ASTM Specificati A615. All reinforcing steel shall be furnished a Grade 60. (fs = 24,000 psi)

All bends and hooks shall meet the requirements of AASHTO Article 8.23. All bend dimensions for reinforcing steel shall be out-to-out of bars. A placement dimensions for reinforcing steel shall be to center of bars unless noted otherwise.

All reinforcing steel shall have 2 inch clear cover unless otherwise noted.

Dimensions shall not be scaled from drawings.

All stations, elevations and dimensions shown are b on "As-built" plans and do not necessarily corre to structure conditions now existing. Stations, elevations and dimensions in field may vary from those shown and shall be adjusted as required an directed by the Engineer.

The Contractor shall provide weakened plane joints required by the Engineer.

Chamfer all exposed corners ¾" per Standard B-19.1 unless noted otherwise.

New Right-of-Way and Easements are not required.

DOWEL NOTE:

Drill 1" diameter hole 6' deep for #6 dowel. Epoxy dowel in hole with an approved epoxy adhesive. E anchorage shall develop a tensile pullout streng of 13 kips for #6 dowels. Details of the anchor system shall be submitted to the Engineer for approval prior to installation.

EXCAVATION NOTE:

Excavated material shall be placed back on top of the floor and the channel regraded to existing f line as directed by the Engineer.

APPROXIMATE QUANTITIES			
Item	Units	Total	AS-BUILT
Structural Excavation	C.Y.	1102	
Class "S" Concrete f'c = 3,000 psi	C.Y.	166	
Reinforcing Steel	Lbs.	10,486	
Dowel Placement	Each	198	

The original bridge was built by the Arizona Hig Department in 1931 under Project No. FA-18 (C) a widened in 1942 under Project No. SNFA-18 C & D (New concrete barrier was added in 1976 under Pro I-10-5(46).

BRIDGE DESIGN SECTION C		DATE
DESIGN	M. Sabahi	3/02
DESIGN CKD	C. Kharier	3/02
DRAWN	J. Waters	3/02
DRG CKD	C. Kharier	3/02
APPROVED-FIELD ENGINEER	C. Kharier	3/02
APPROVED-DESIGN LEADER	S. Y. Hau	3/02

ARIZONA DEPARTMENT OF TRANSPORTATION
INTERMODAL TRANSPORTATION DIVISION
BRIDGE GROUP

STA. 2108+
CORNFIELD CANYON BRIDGE WB
SCOUR PROTECTION DETAILS

I-10	299.14	0073	LOCATION: CORNFIELD CANYON BRIDGE, WB
TRACS NO. H5993 01C			010-E-502

Chinle Wash Bridge, US 160 MP 429.06

FEDERAL REGION	STATE	PROJECT NO.	SHEET NO.	TOTAL SHEETS
9	ARIZ.	160-B-500	3	6
		160 AP 429		

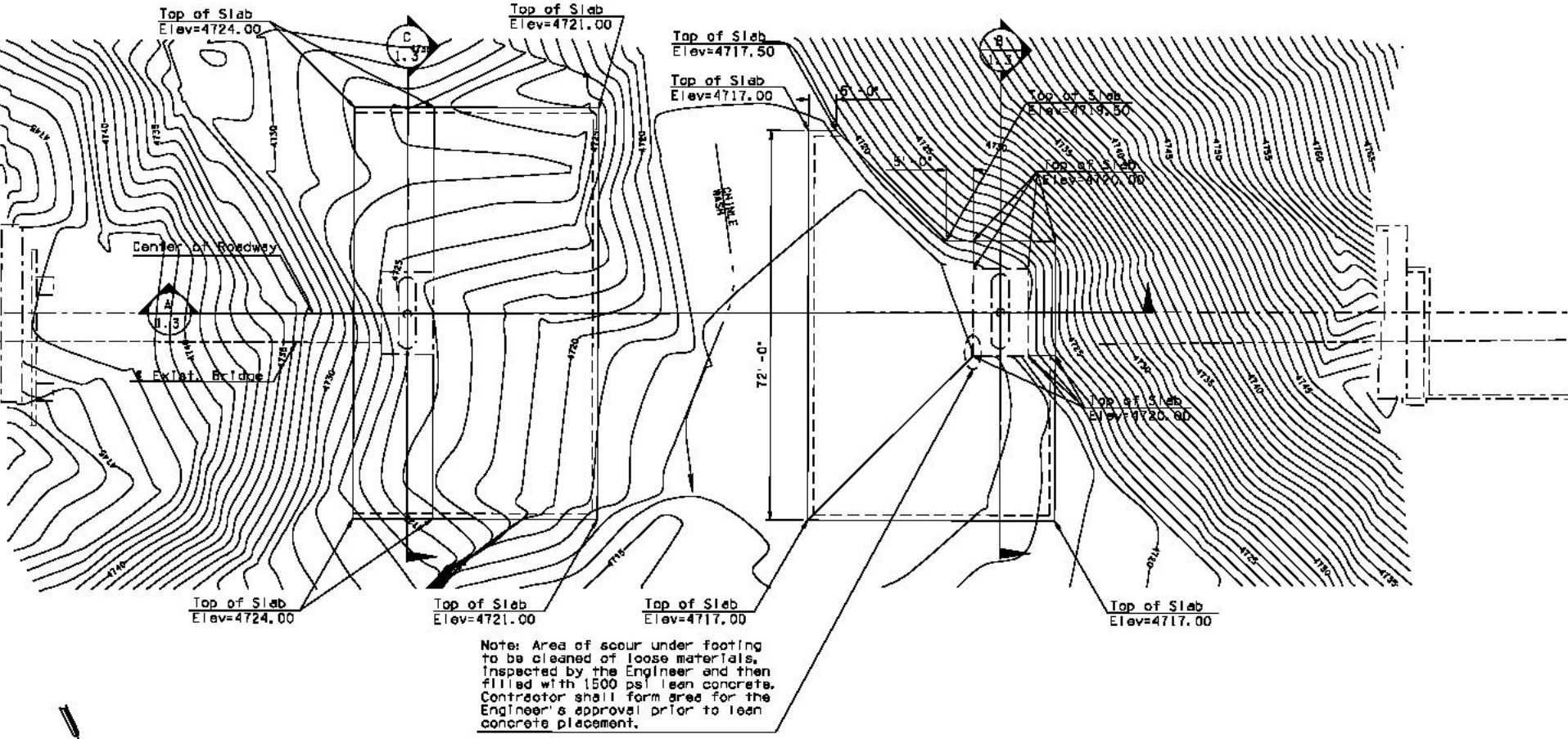

Note: Area of scour under footing to be cleaned of loose materials. Inspected by the Engineer and then filled with 1500 psi lean concrete. Contractor shall form area for the Engineer's approval prior to lean concrete placement.

PROPOSED SCOUR PROTECTION GENERAL PLAN

SCALE: 1"=10'

NOTE:

For right-of-way limits and Site Access, See site Access Plan, DWG S-1.5.

FEDERAL REGION	STATE	PROJECT NO.	SHEET NO.	TOTAL SHEETS
9	ARIZ.	160-B-500	4	6
		160 AP 429		

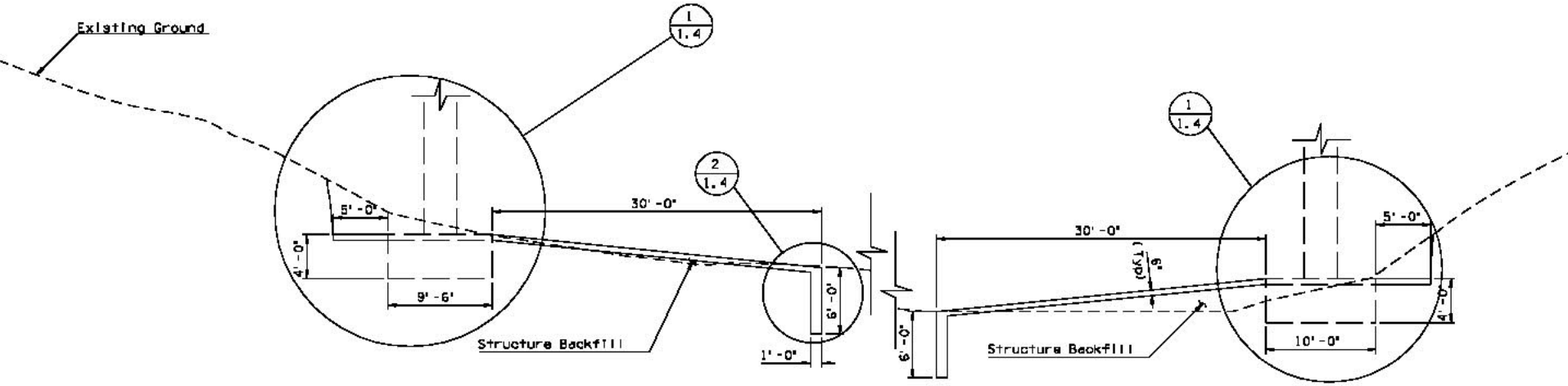

SECTION ALONG ROADWAY ℄ (A / 1.2)
SCALE 1" =5'

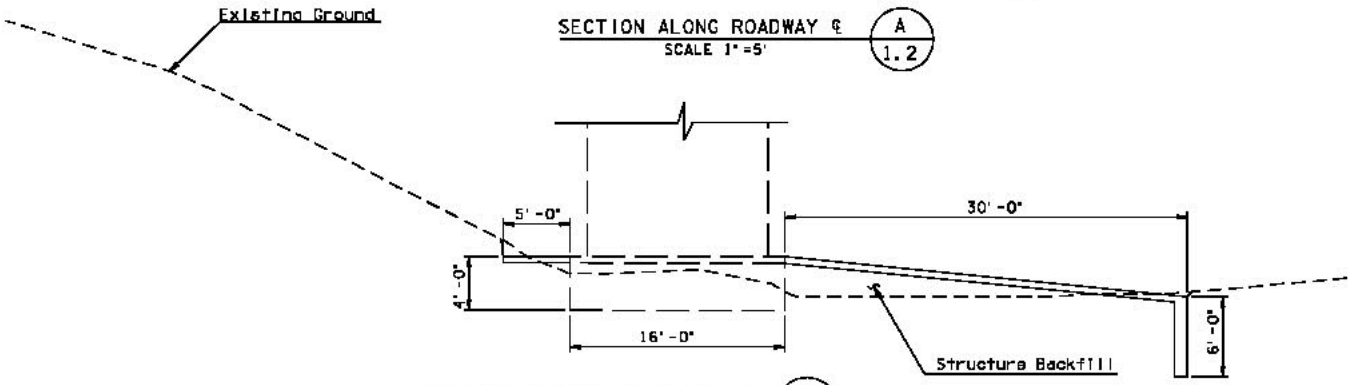

SECTION THROUGH PIER NO. 2 (B / 1.2)
SCALE 1" =5'

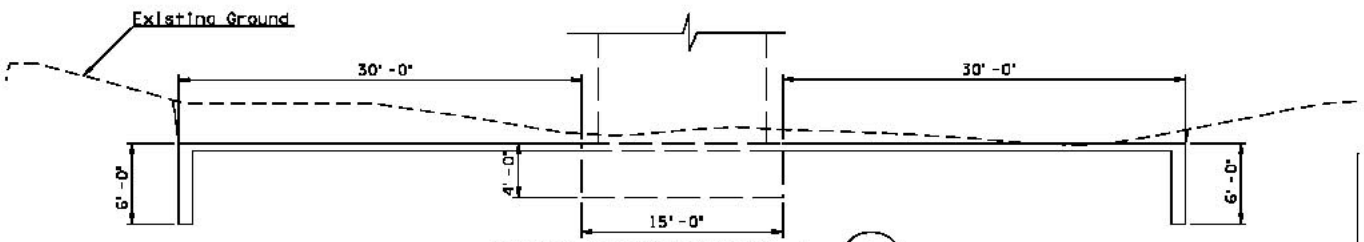

SECTION THROUGH PIER NO. 1 (C / 1.2)
SCALE 1" =5'

FEDERAL REGION	STATE	PROJECT NO.	SHEET NO.	TOTAL SHEETS
9	ARIZ.	160-B-500	5	6
		160 AP 429		

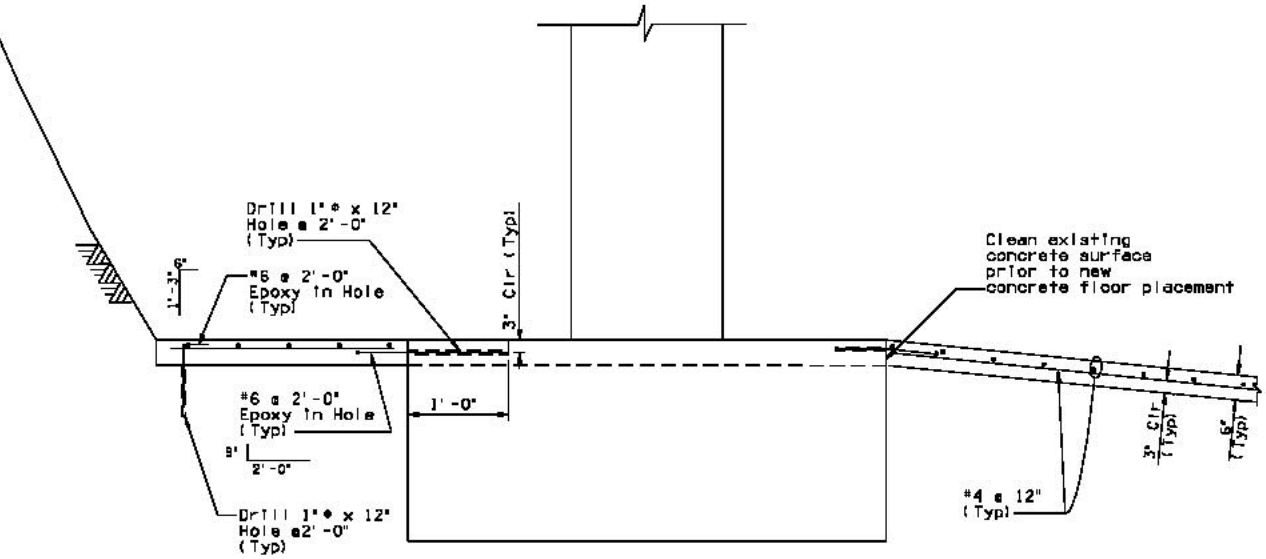

DETAIL 1/1.3
SCALE: 3/4" = 1'-0"

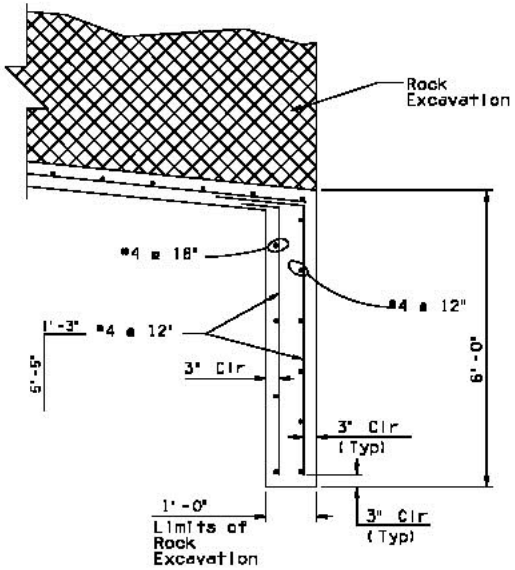

DETAIL 2/1.3
SCALE: 3/4" = 1'-0"

Lessons Learned

- **Environmental concerns may delay the project development and affect the design methodology.**
- **The few ADOT site installations suggest that scour monitoring does not appear to be a feasible option to pursue at ephemeral washes.**
- **Revisiting the initial scour assessment, prior to committing scour retrofit construction funds through a scour technical evaluation memo during initial phase of development of projects within the corridor of the bridge site, is beneficial.**
- **Presence of ground water and sudden rainstorm during construction can lead to change orders.**

Challenges Ahead

- Selecting a maintenance free and cost effective scour countermeasure over ephemeral rivers considering factors such as recent FEMA studies, remaining life of the bridge etc.
- Incorporating non-scour related repair works into the project in order to reduce impacts to traveling public and construction mobilization costs.
- Incorporating concerns from bridge inspection engineers and maintenance staff into the statewide plan of action.

THANK YOU

ANY QUESTIONS?