REG	STATE	PROJECT	SHEET NO.	TOTAL SHEETS

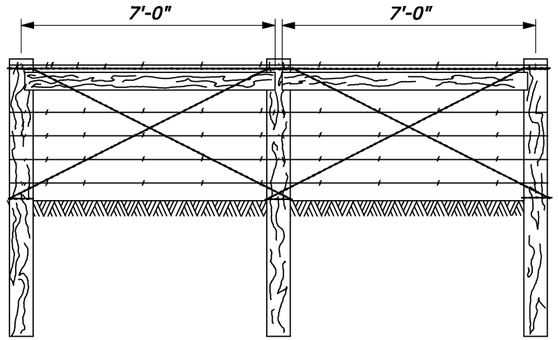

INTERMEDIATE BRACE PANEL

(Tie both runs of wire to center post)

NOTE:

1. Posts are made from West Coast Douglas Fir, Ponderosa Pine, or Lodgepole Pine. Posts are treated in accordance with AASHTO 133 using either Pentachlorophenal or Chromated Copper Arsenate. Minimum net retention of preservative per cubic foot of wood shall be:
   Pentachlorophenol 0.5 lb
   Chromated Copper Arsenate 0.5 lb
   Brace panel posts and horizontal braces have a minimum diameter of 6" and have a minimum length of 7'. Line posts have a minimum diameter of 5" and have a minimum length of 6'-6". Determine the diameters by measuring the circumference and dividing by 3.14.
2. Barbed wire conforms to ASTM A121, Class I, and are two strands of 12 1/2 gage galvanized wire, twisted, having two point, double wrap, 14 gage round barbs, maximum of 4" apart. Minimum net weight is 78 pounds per 80-rod steel
3. Wire mesh fabric conforms to ASTM A116, Class I. Fabric is 25" wide, consisting of 7 horizontal wires with vertical cross wires spaced 6" apart. The top and bottom wires are 10 gage galvanized and the intermediate wires and vertical wires are 12 1/2 gage galvanized.
4. Wire stays are double strand, twisted, 9 1/2 gage galvanized. Brace tension wires are double strand, twisted, 8 gage galvanized. Staples are 1 1/2 " long, .015" galvanized.
5. Standard gates are 3'-6" high, consisting of a 1 1/8 " O.D. galvanized steel tubular frame, and vertical braces at midpoint for gates 14' wide or less. Two braces at third points are required for gates over 14' wide. Woven wire mesh is as specified above, except that cross wires may be either a 2" or 4" spacing; or alternatively, chain link fabric may be used. Gate has adjustable hinges and a diagonal, adjustable, sag rod consisting of 3/8 " galvanized steel. Latch is a chain with a closeable hook on one end, firmly stapled to the post. All fittings are galvanized.
6. Place brace panels at all corners, ends, intersections and gates. Also place brace panels at all changes in alignment and grade in excess of 20 degrees. Place brace panels at uniform intervals of not more than 660'. In addition to brace panels adjacent to the standard gate, place a brace panel 33' each side of the gate bracing, except where another brace panel exists within 165' of the gate bracing.
7. Staple every strand of barbed wire, and every other horizontal strand of wire mesh fabric to each post in accordance with standard procedure. Mortise braces into posts 1", and nail with 4-40d nails at each end. Loop brace tension wires completely around the posts and firmly staple to prevent slippage.

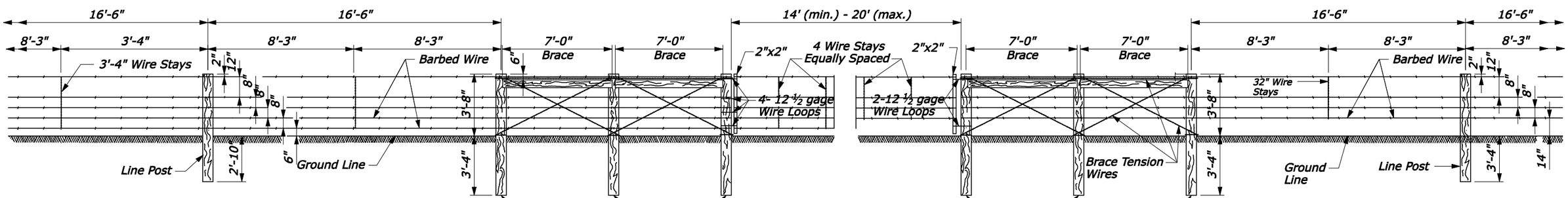

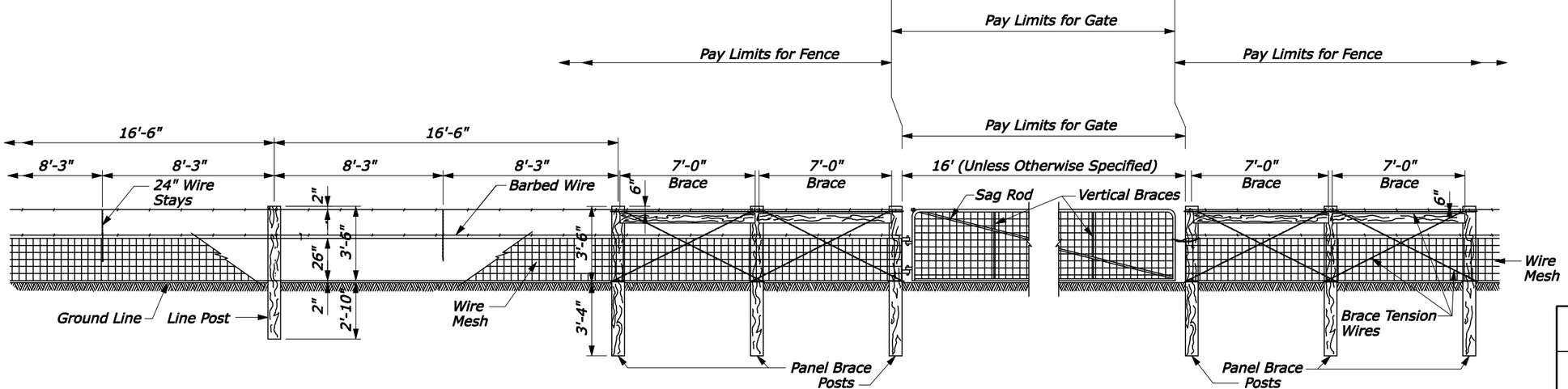

U.S. DEPARTMENT OF TRANSPORTATION
FEDERAL HIGHWAY ADMINISTRATION
CENTRAL FEDERAL LANDS HIGHWAY DIVISION

U.S. CUSTOMARY DETAIL

WIRE FENCES WITH WOOD POST

DETAIL APPROVED FOR USE 07/2004
REVISED: 08/2006

DETAIL C619-51

8/8/2006 9:11:22 AM L:\DESIGN\AD2\CFL Details Team\Web Ready\C619-51.dgn