| REG | STATE | PROJECT | SHEET NO. | TOTAL SHEETS |
|---|---|---|---|---|
| | | | | |

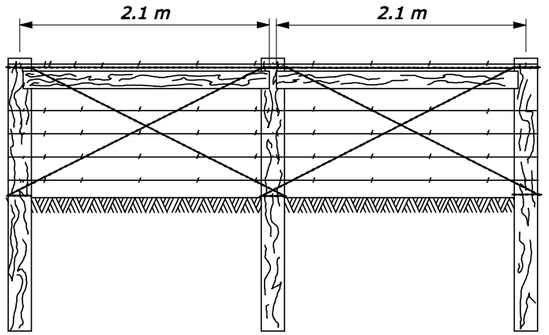


**INTERMEDIATE BRACE PANEL**

(Tie both runs of wire to center post)

## NOTE:

1. Posts are made from West Coast Douglas Fir, Ponderosa Pine, or Lodgepole Pine. Posts are treated in accordance with AASHTO M 133 using either Pentachlorophenol or Chromated Copper Arsenate. Minimum net retention of preservative per cubic meter of wood shall be:
   Pentachlorophenol 0.23 kg
   Chromated Copper Arsenate 0.23 kg
   Brace panel posts and horizontal braces have a minimum diameter of 150 mm and have a minimum length of 2.1 m. Line posts have a minimum diameter of 125 mm and have a minimum length of 2.0 m. Determine the diameters by measuring the circumference and dividing by 3.14.
2. Barbed wire conforms to ASTM A121, Class I, and are two strands of 2.5 mm galvanized wire, twisted, having two point, double wrap, 2.0 mm round barbs, maximum of 100 mm apart. Minimum net weight is 0.08 kg/m.
3. Wire mesh fabric conforms to ASTM A116, Class I. Fabric is 650 mm wide, consisting of 7 horizontal wires with vertical cross wires spaced 150 mm apart. The top and bottom wires are 3.4 mm galvanized and the intermediate wires and vertical wires are 2.5 mm galvanized.
4. Wire stays are double strand, twisted, 3.6 mm galvanized. Brace tension wires are double strand, twisted, 4.1 mm galvanized. Staples are 38 mm long, 3.76 mm galvanized.
5. Standard gates are 1.0 m high, consisting of a 29 mm O.D. galvanized steel tubular frame, and vertical braces at midpoint for gates 4.3 m wide or less. Two braces at third points are required for gates over 4.3 m wide. Woven wire mesh is as specified above, except that cross wires may be either a 50 mm or 100 mm spacing; or alternatively, chain link fabric may be used. Gate has adjustable hinges and a diagonal, adjustable, sag rod consisting of 10 mm galvanized steel. Latch is a chain with a closeable hook on one end, firmly stapled to the post. All fittings are galvanized.
6. Place brace panels at all corners, ends, intersections and gates. Also place brace panels at all changes in alignment and grade in excess of 20 degrees. Place brace panels at uniform intervals of not more than 200 m. In addition to brace panels adjacent to the standard gate, place a brace panel 10 m each side of the gate bracing, except where another brace panel exists within 50 m of the gate bracing.
7. Staple every strand of barbed wire, and every other horizontal strand of wire mesh fabric to each post in accordance with standard procedure. Mortise braces into posts 25 mm, and nail with 4-40d nails at each end. Loop brace tension wires completely around the posts and firmly staple to prevent slippage.

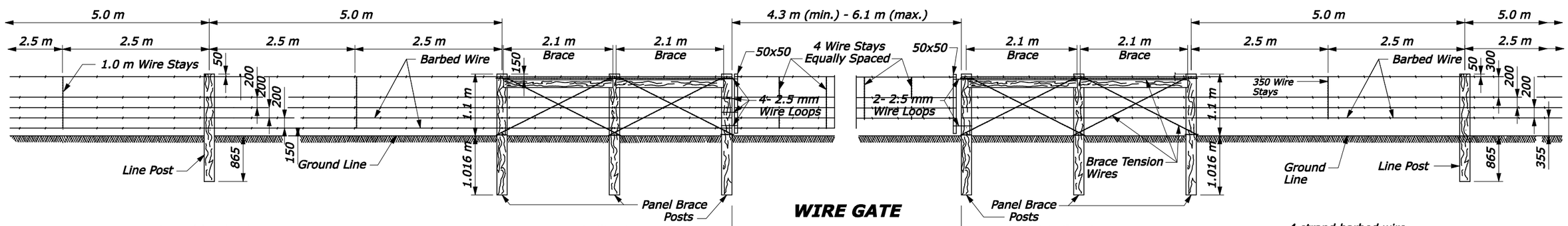


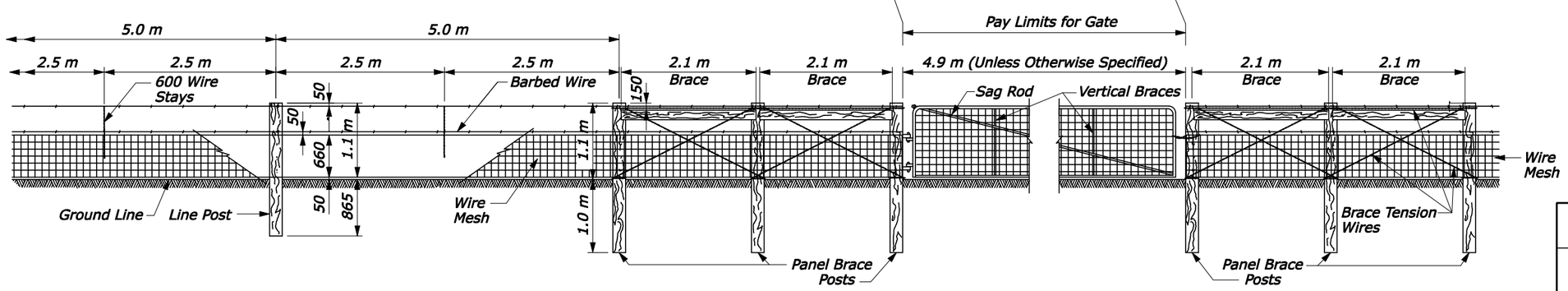


NO SCALE

U.S. DEPARTMENT OF TRANSPORTATION
FEDERAL HIGHWAY ADMINISTRATION
CENTRAL FEDERAL LANDS HIGHWAY DIVISION

METRIC DETAIL

**WIRE FENCES WITH WOOD POST**

DETAIL APPROVED FOR USE 07/2004
REVISED: 08/2006

DETAIL CM619-51

8/8/2006 9:16:01 AM L:\DESIGN\AD2\CFL Details Team\Web Ready\C619-51.dgn