Memorandum

DATE: June 4, 2010

FROM: Colin Haggerty, PE, CFM

TO: Roger Kilgore, PE, Gary Strike, PE;
U.S. Department of Transportation
Federal Highway Administration

COPY: Dennis Eden, PB

SUBJECT: LAME 112(1) HYDROLOGIC AND HYDRAULIC ANALYSIS MEMORANDUM PB PROJ # 31510E

Dear Mr. Kilgore:

During the pre-70% field review completed in June of 2009, PB along with CFL walked the LAME 112(1) alignment to determine locations that needed analysis. As a result of the field review, five (5) culverts and one (1) low water crossing were identified as locations where additional analyses were needed. Preliminary design was completed based on the requirements of the Project Development and Design Manual (PDDM) and require that the peak 50-year runoff event be conveyed by the culverts with a Headwater to Depth ratio of 1.5 for culverts smaller than 1200mm. The flowrates for culvert design and Low Water Crossings (LWC) were determined utilizing the rational methodology, since the delineated subbasins were less than 80 hectare (200 acres). A LWC was identified at one location due to limited cover at the proposed roadway sections and existing topography. The size and shapes of the low water crossings were based on field conditions and were limited to a depth of flow of 0.15 meters. Riprap was placed at nine (9) of the culvert locations and was sized using the Federal Highway Administration (FHWA) guidance for standard riprap class. The tributary subbasins are depicted on the Drainage Basin Maps.

Proposed Culvert / Low Water Crossing Locations:

Culvert D260 is an existing single 600mm corrugated metal pipe (CMP) culvert. From field reconnaissance this culvert appeared to be plugged from sediment and was not found. The current condition of this facility was operating as a LWC. The proposed design for culvert D260 is to remove the existing culvert and construct a LWC per detail sheet G5. The design of the LWC includes cutoff walls both upstream and downstream of the proposed roadway. The LWC will be designed to allow for a depth of flow of 0.15 meters. This tributary area of 10.4 hectares produces a peak 50-year runoff of 0.67 cubic meters per second (cms).

Culvert D263 is an existing single 600mm CMP culvert. This culvert's upstream end is similar to culvert D260 in that it appeared to be plugged from sediment and was not located. The proposed roadway sections were graded to allow for a Type 6B inlet to be utilized. The tributary area of 0.59 hectares produces a peak 50-year runoff of 0.06 cms. The inlet Type 6B was analyzed as an inlet grate with the orifice calculation. The calculated depth of approximately 0.02 meters of head acting on the centerline provides adequate capture capacity.

Culvert D267A is a proposed 600mm CMP culvert as no existing culvert was found at this location. In order to alleviate any runoff ponding issues that arise with the proposed alignment a culvert will be installed. Based on the subbasin delineation, the tributary area is approximately 1.2 hectares and generates a 0.14 cms of peak runoff during the 50-year event. The HY-8 analysis shows that the proposed culvert has adequate capacity to convey this flow without overtopping the proposed roadway at an Hw/D ratio of 0.58.

Similar to D267A, there is no existing culvert at Culvert D268A and runoff appears to overtop the roadway during flooding events. A 600mm CMP culvert is proposed at this location. Based on the subbasin delineation, the tributary area is approximately 1.3 hectares and generates a 0.15 cms of peak runoff during the 50-year event. The HY-8 analysis shows that the proposed culvert has adequate capacity to convey this flow without overtopping the proposed roadway at an Hw/D ratio of 0.60.

Culvert D268B is also a proposed 600mm CMP culvert as no existing culvert is located at the proposed roadway alignment low point. Based on the subbasin delineation, the tributary area is approximately 1.0 hectares and generates a 0.10 cms of peak runoff during the 50-year event. The HY-8 analysis shows that the proposed culvert has adequate capacity to convey this flow without overtopping the proposed roadway at an Hw/D ratio of 0.48.

At Station 5+564 a low point currently exists. Because of limited cover, the proposed roadway vertical alignment was raised to give Culvert D268C sufficient cover. Culvert D268C is proposed to be a 600mm CMP culvert. This tributary area also receives runoff from D268B and combined is approximately 1.9 hectares which generates a 0.17 cms of peak runoff during the 50-year event. The HY-8 analysis shows that the proposed culvert has adequate capacity to convey this flow without overtopping the proposed roadway at an Hw/D ratio of 0.65.

A proposed 600mm CMP culvert was analyzed for D268D. Similar to D260 above, no culvert was found at this location. In order to provide adequate drainage, the roadway's proposed vertical alignment will be raised to provide adequate pipe cover. Based on the subbasin delineation, the tributary area is approximately 1.7 hectares and generates a 0.18 cms of peak runoff during the 50-year event. The HY-8 analysis shows that the proposed culvert has adequate capacity to convey this flow without overtopping the proposed roadway at an Hw/D ratio of 0.67. This facility is spatially located just north of the Echo Bay Road campground.

The last proposed drainage facility for the LAME 112(1) alignment is situated at station 6+460. This facility is a proposed 600mm CMP culvert and stamped as D270. D270 is an existing low point in both the existing and proposed vertical alignments. This facility will exceed the requirements set forth by the PDDM in that it'll convey the 50-year flood while meeting the Hw/D ratio of 1.5.

A summary table for the areas analyzed and mentioned above has been included to expedite the review for this segment.

Culvert ID	Station	Tributary Area		Additional		Culvert Size	Flowrate – Q_{50}		Hw	Hw/ D
		ha	mi^2	Basins	#	mm	cfs	cms	m	
D260	0+291	10.39	0.04	-	-	-	23.61	0.67	-	-
D263	2+043	0.59	0.002	-	1	600	2.16	0.06	-	-
D267A	4+704	1.23	0.005	-	1	600	5.09	0.14	0.35	0.58
D268A	5+167	1.25	0.005	-	1	600	5.17	0.15	0.36	0.60
D268B	5+424	0.97	0.004	-	1	600	3.65	0.10	0.29	0.48
D268C	5+564	1.88	0.007	D268B	1	600	5.94	0.17	0.39	0.65
D268D	5+904	1.70	0.007	-	1	600	6.39	0.18	0.40	0.67

Riprap was placed at ten of the culvert locations and was sized using the Federal Highway Administration (FHWA) guidance for standard riprap class. This standard riprap class coincides with the methodology presented in HEC-14, Section 10 for Riprap Aprons. Calculations for the hydrology and hydraulics are in included in the appendix as well the drainage basin maps. The culverts summarized above are able to convey the 50-year storm runoff without roadway overtopping. The calculations for all of the locations above have been included for review as an attachment. If you need additional information or have any other questions regarding this memo, please do not hesitate to contact me at (303) 390-5844.

PARSONS BRINCKERHOFF

Colin Haggerty, PE, CFM

APPENDIX A

DRAINAGE BASIN MAPS

REG	STATE	PROJECT	SHEET NO.	TOTAL SHEETS
PW	NV	PRA-LAME 112(1) ECHO BAY ACCESS ROAD	BM01	BM05

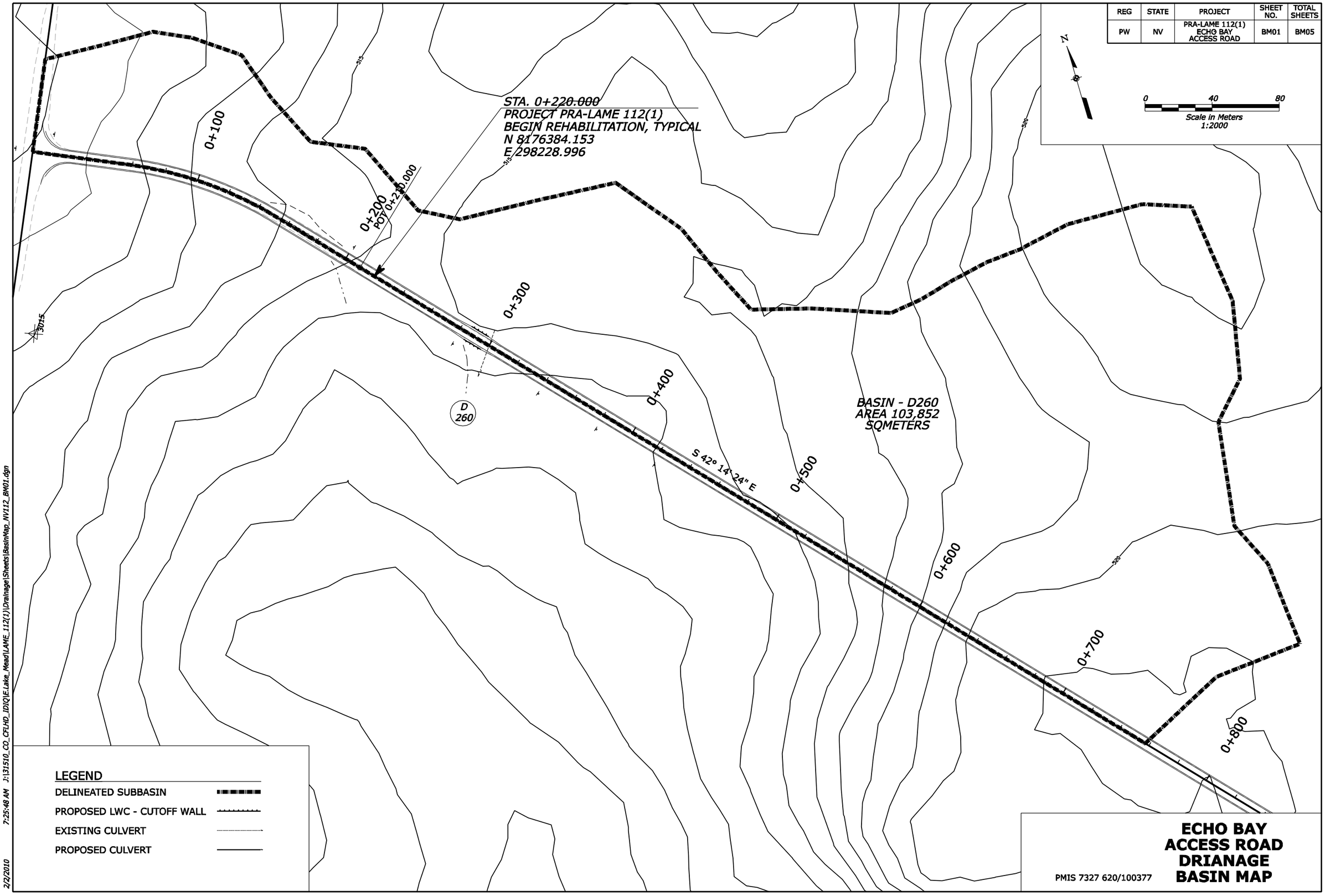

2/2/2010 7:25:48 AM J:\31510_CO_CFLHD_IDIQ\E.Lake_Mead\LAME_112(1)\Drainage\Sheets\BasinMap_NV112_BM01.dgn

REG	STATE	PROJECT	SHEET NO.	TOTAL SHEETS
PW	NV	PRA-LAME 112(1) ECHO BAY ACCESS ROAD	BM02	BM05

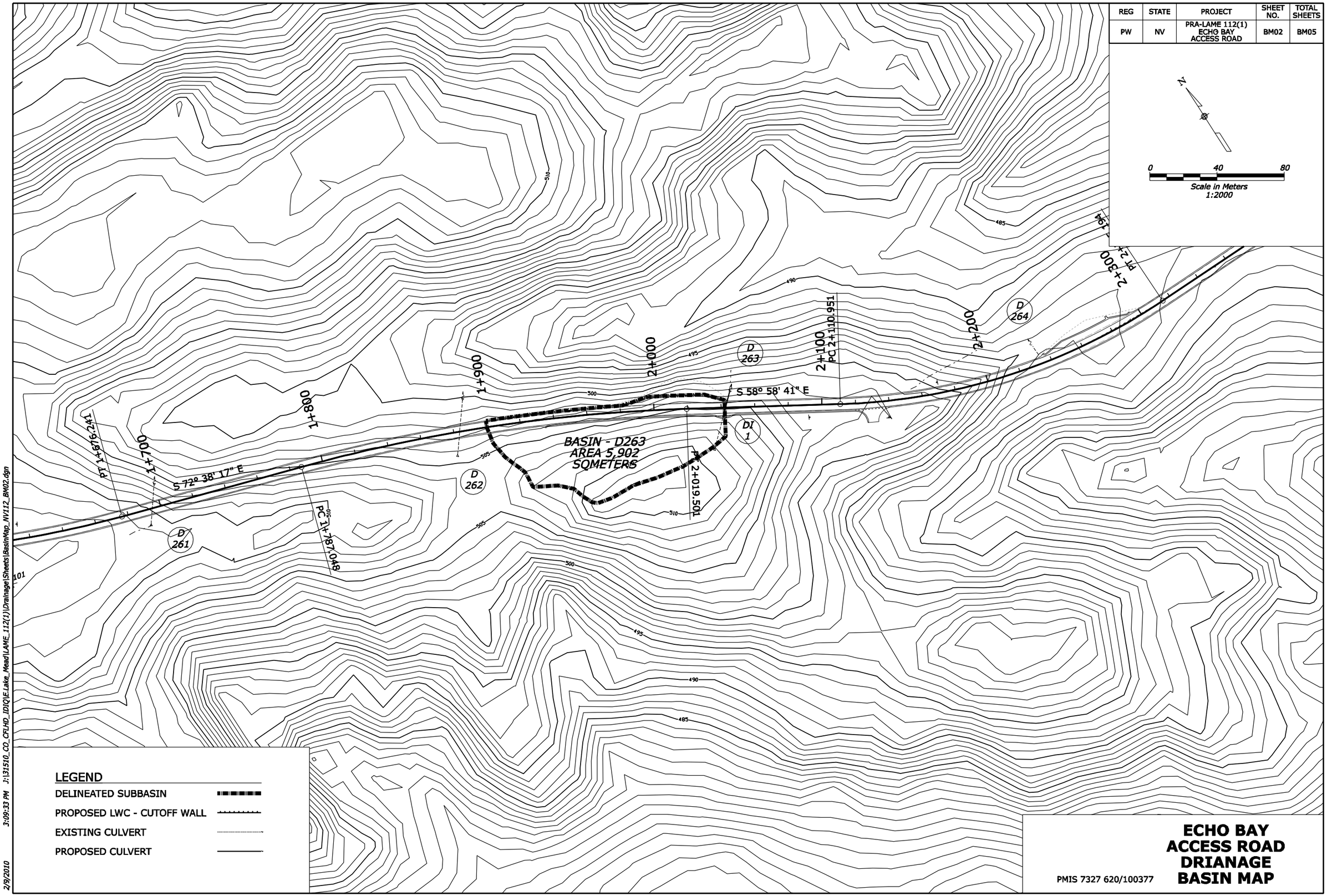

LEGEND

- DELINEATED SUBBASIN
- PROPOSED LWC - CUTOFF WALL
- EXISTING CULVERT
- PROPOSED CULVERT

ECHO BAY ACCESS ROAD DRIANAGE BASIN MAP

PMIS 7327 620/100377

2/9/2010 3:09:33 PM J:\31510_CO_CFLHD_IDIQ\E.Lake_Mead\LAME_112(1)\Drainage\Sheets\BasinMap_NV112_BM02.dgn

REG	STATE	PROJECT	SHEET NO.	TOTAL SHEETS
PW	NV	PRA-LAME 112(1) ECHO BAY ACCESS ROAD	BM03	BM05

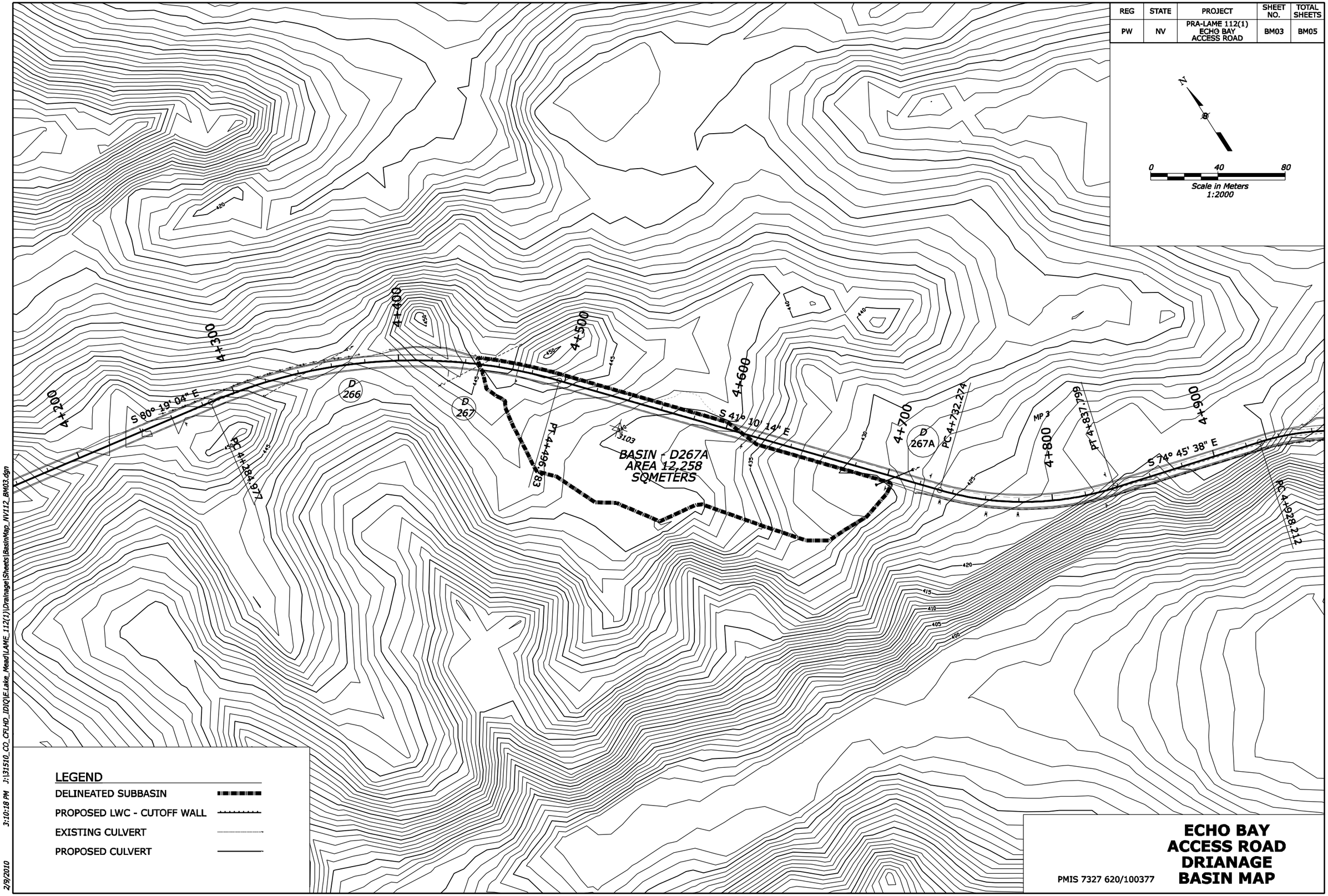

PMIS 7327 620/100377

ECHO BAY ACCESS ROAD DRIANAGE BASIN MAP

2/9/2010 3:10:18 PM J:\131510_CO_CFLHD_IDIQIE.Lake_Mead\LAME_112(1)\Drainage\Sheets\BasinMap_NV112_BM03.dgn

REG	STATE	PROJECT	SHEET NO.	TOTAL SHEETS
PW	NV	PRA-LAME 112(1) ECHO BAY ACCESS ROAD	BM04	BM05

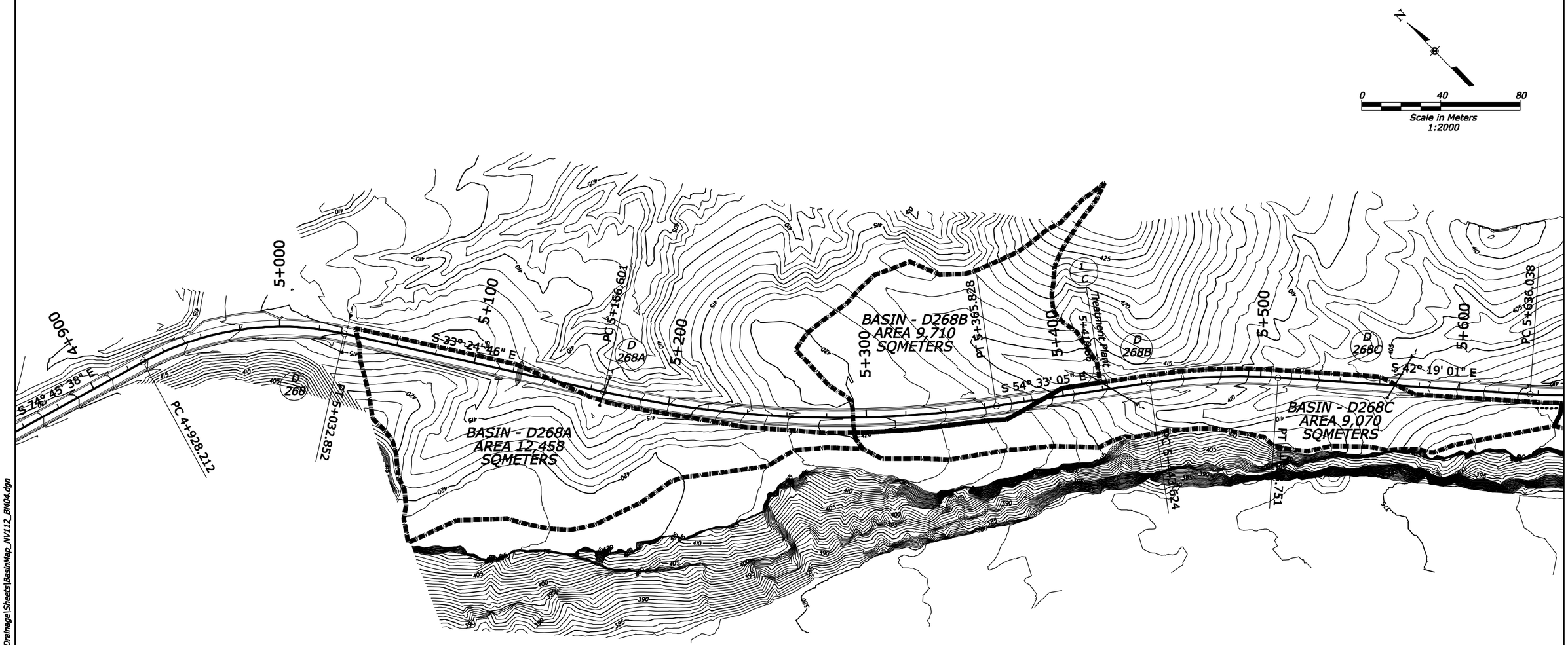

LEGEND

- DELINEATED SUBBASIN
- PROPOSED LWC - CUTOFF WALL
- EXISTING CULVERT
- PROPOSED CULVERT

PMIS 7327 620/100377

ECHO BAY ACCESS ROAD DRIANAGE BASIN MAP

2/9/2010 3:11:09 PM J:\31510_CO_CFLHD_IDIQ\E.Lake_Mead\LAME_112(1)\Drainage\Sheets\BasinMap_NV112_BM04.dgn

REG	STATE	PROJECT	SHEET NO.	TOTAL SHEETS
PW	NV	PRA-LAME 112(1) ECHO BAY ACCESS ROAD	BM05	BM05

LEGEND

- DELINEATED SUBBASIN
- PROPOSED LWC - CUTOFF WALL
- EXISTING CULVERT
- PROPOSED CULVERT

PMIS 7327 620/100377

ECHO BAY ACCESS ROAD DRIANAGE BASIN MAP

2/9/2010 3:11:52 PM J:\31510_CO_CFLHD_IDIQ\E.Lake_Mead\LAME_112(1)\Drainage\Sheets\BasinMap_NV112_BM05.dgn

APPENDIX B

HYDROLOGY RATIONAL CALCULATIONS

Project: Nevada Project Pra-Lame 112 (1) : Echo Bay Marina Access Road

Title: Q_{50} Runoff-Calculations
Rational Methodology

Project No	31510E
Prepared by	M. Tilko
Date	1/26/2010
Verified by	C. Haggerty
Date	2/2/2010

Basin ID	Station	Overland flow length L_i	Overland Slope S	Runoff coefficient C_{50}	Overland Flow time t_i	Upper Elevation	Lower Elevation	Length gutter flow L_t	Gutter Slope S_w	Conveyence coefficient C_v	Water velocity V	Gutter flow time t_t	Time Con. t_c	Intensity I	Ave Runoff Coefficient C	Total Area A	Total Area A	Flow Q_{50}	Flow Q_{50}	Number of barrel	Culvert Size width	Culvert Size height	Headwater	Hw/D
		(ft)	(%)		(min)	(ft)	(ft)	(ft)	(%)	(table below)	(ft/sec)	(min)	(min)	(in/hr)		(m^2)	(ac)	(cfs)	(cms)		(mm)	(mm)	(m)	(ratio)
D260	0+291	151	2.16	0.46	*11.01*	1708	1675	1489	2.20	10	1.48	*16.73*	27.74	*2.30*	*0.40*	*103852.07*	*25.66*	**23.61**	**0.67**	--	--	--	--	--
D263	2+043	121	23.04	0.46	*4.52*	1639	1634	427	1.03	10	1.01	*7.03*	11.54	*3.70*	*0.40*	*5901.44*	*1.46*	**2.16**	**0.06**	1	--	600	--	--
D267A	4+704	30	8.70	0.46	*3.11*	1447	1402	808	5.52	10	2.35	*5.73*	8.84	*4.20*	*0.40*	*12258.05*	*3.03*	**5.09**	**0.14**	1	--	600	0.348	0.58
D268A	5+167	101	10.39	0.46	*5.36*	1373	1352	395	5.48	10	2.34	*2.82*	8.18	*4.20*	*0.40*	*12457.59*	*3.08*	**5.17**	**0.15**	1	--	600	0.362	0.60
D268B	5+424	173	5.13	0.46	*8.85*	1369	1355	394	3.67	10	1.91	*3.43*	12.27	*3.80*	*0.40*	*9709.59*	*2.40*	**3.65**	**0.10**	1	--	600	0.288	0.48
D268C	5+564	173	5.13	0.46	*8.85*	1369	1333	909	3.97	10	1.99	*7.60*	16.45	*3.20*	*0.40*	*18779.45*	*4.64*	**5.94**	**0.17**	1	--	600	0.388	0.65
D268D	5+904	44	4.51	0.46	*4.64*	1346	1304	879	4.85	10	2.20	*6.65*	11.30	*3.80*	*0.40*	*17012.77*	*4.20*	**6.39**	**0.18**	1	--	600	0.401	0.67

NRCS Land Type Conveyance Coefficients:

NRCS Land Type	Heavy Meadow	Tillage/ Field	Short Pasture/ Lawns	Nearly Bare Ground	Grassed Swales/ Waterways	Paved Areas & Shallow Paved Swales (Sheet Flow)
Conveyance	2.5	5	7	10	15	20

APPENDIX C

LOW WATER CROSSING WEIR CALCULATION

LWC-D260_0+291 (Weir Calculation)

Project Description

Solve For	Crest Elevation

Input Data

Discharge		0.67	m³/s
Headwater Elevation		0.32	m
Tailwater Elevation		0.00	m
Crest Surface Type	Paved		
Crest Breadth		7.80	m
Crest Length		12.00	m

Results

Crest Elevation	0.22	m
Headwater Height Above Crest	0.10	m
Tailwater Height Above Crest	-0.22	m
Weir Coefficient	1.65	SI
Submergence Factor	1.00	
Adjusted Weir Coefficient	1.65	SI
Flow Area	1.26	m²
Velocity	0.53	m/s
Wetted Perimeter	12.21	m
Top Width	12.00	m

APPENDIX D

HY-8 CULVERT CALCULATIONS

HY-8 Culvert Analysis Report

Site Data - D267A Proposed 600mm CMP

Site Data Option: Culvert Invert Data

Inlet Station: 0.00 m

Inlet Elevation: 427.29 m

Outlet Station: 21.60 m

Outlet Elevation: 426.21 m

Number of Barrels: 1

Culvert Data Summary - D267A Proposed 600mm CMP

Barrel Shape: Circular

Barrel Diameter: 600.00 mm

Barrel Material: Corrugated Steel

Embedment: 0.00 mm

Barrel Manning's n: 0.0240

Inlet Type: Conventional

Inlet Edge Condition: Mitered to Conform to Slope

Inlet Depression: None

Tailwater Channel Data - D267A - Sta. 4+704

Tailwater Channel Option: Trapezoidal Channel

Bottom Width: 3.50 m

Side Slope (H:V): 1.90 (_:1)

Channel Slope: 0.1580

Channel Manning's n: 0.0350

Channel Invert Elevation: 426.21 m

Roadway Data for Crossing: D267A - Sta. 4+704

Roadway Profile Shape: Constant Roadway Elevation

Crest Length: 14.00 m

Crest Elevation: 428.18 m

Roadway Surface: Paved

Roadway Top Width: 12.52 m

Table 1 - Summary of Culvert Flows at Crossing: D267A - Sta. 4+704

Headwater Elevation (m)	Total Discharge (cms)	D267A Proposed 600mm CMP Discharge (cms)	Roadway Discharge (cms)	Iterations
427.64	0.14	0.14	0.00	1
427.64	0.14	0.14	0.00	1
427.64	0.14	0.14	0.00	1
427.64	0.14	0.14	0.00	1
427.64	0.14	0.14	0.00	1
427.64	0.14	0.14	0.00	1
427.64	0.14	0.14	0.00	1
427.64	0.14	0.14	0.00	1
427.64	0.14	0.14	0.00	1
427.64	0.14	0.14	0.00	1
427.64	0.14	0.14	0.00	1
428.18	0.50	0.50	0.00	Overtopping

Table 2 - Culvert Summary Table: D267A Proposed 600mm CMP

Total Discharge (cms)	Culvert Discharge (cms)	Headwater Elevation (m)	Inlet Control Depth (m)	Outlet Control Depth (m)	Flow Type	Normal Depth (m)	Critical Depth (m)	Outlet Depth (m)	Tailwater Depth (m)	Outlet Velocity (m/s)	Tailwater Velocity (m/s)
0.14	0.14	427.64	0.348	0.0*	1-S2n	0.176	0.240	0.176	0.034	2.025	1.166
0.14	0.14	427.64	0.348	0.0*	1-S2n	0.176	0.240	0.176	0.034	2.025	1.166
0.14	0.14	427.64	0.348	0.0*	1-S2n	0.176	0.240	0.176	0.034	2.025	1.166
0.14	0.14	427.64	0.348	0.0*	1-S2n	0.176	0.240	0.176	0.034	2.025	1.166
0.14	0.14	427.64	0.348	0.0*	1-S2n	0.176	0.240	0.176	0.034	2.025	1.166
0.14	0.14	427.64	0.348	0.0*	1-S2n	0.176	0.240	0.176	0.034	2.025	1.166
0.14	0.14	427.64	0.348	0.0*	1-S2n	0.176	0.240	0.176	0.034	2.025	1.166
0.14	0.14	427.64	0.348	0.0*	1-S2n	0.176	0.240	0.176	0.034	2.025	1.166
0.14	0.14	427.64	0.348	0.0*	1-S2n	0.176	0.240	0.176	0.034	2.025	1.166
0.14	0.14	427.64	0.348	0.0*	1-S2n	0.176	0.240	0.176	0.034	2.025	1.166
0.14	0.14	427.64	0.348	0.0*	1-S2n	0.176	0.240	0.176	0.034	2.025	1.166

Site Data - D268A Proposed 600mm CMP

Site Data Option: Culvert Invert Data

Inlet Station: 0.00 m

Inlet Elevation: 411.54 m

Outlet Station: 13.10 m

Outlet Elevation: 411.30 m

Number of Barrels: 1

Culvert Data Summary - D268A Proposed 600mm CMP

Barrel Shape: Circular

Barrel Diameter: 600.00 mm

Barrel Material: Corrugated Steel

Embedment: 0.00 mm

Barrel Manning's n: 0.0240

Inlet Type: Conventional

Inlet Edge Condition: Mitered to Conform to Slope

Inlet Depression: None

Tailwater Channel Data - D268A - Sta. 5+167

Tailwater Channel Option: Trapezoidal Channel

Bottom Width: 12.30 m

Side Slope (H:V): 2.10 (_:1)

Channel Slope: 0.1740

Channel Manning's n: 0.0350

Channel Invert Elevation: 411.30 m

Roadway Data for Crossing: D268A - Sta. 5+167

Roadway Profile Shape: Constant Roadway Elevation

Crest Length: 16.00 m

Crest Elevation: 412.62 m

Roadway Surface: Paved

Roadway Top Width: 6.67 m

Table 3 - Summary of Culvert Flows at Crossing: D268A - Sta. 5+167

Headwater Elevation (m)	Total Discharge (cms)	D268A Proposed 600mm CMP Discharge (cms)	Roadway Discharge (cms)	Iterations
411.90	0.15	0.15	0.00	1
411.90	0.15	0.15	0.00	1
411.90	0.15	0.15	0.00	1
411.90	0.15	0.15	0.00	1
411.90	0.15	0.15	0.00	1
411.90	0.15	0.15	0.00	1
411.90	0.15	0.15	0.00	1
411.90	0.15	0.15	0.00	1
411.90	0.15	0.15	0.00	1
411.90	0.15	0.15	0.00	1
411.90	0.15	0.15	0.00	1
412.62	0.58	0.58	0.00	Overtopping

Table 4 - Culvert Summary Table: D268A Proposed 600mm CMP

Total Discharge (cms)	Culvert Discharge (cms)	Headwater Elevation (m)	Inlet Control Depth (m)	Outlet Control Depth (m)	Flow Type	Normal Depth (m)	Critical Depth (m)	Outlet Depth (m)	Tailwater Depth (m)	Outlet Velocity (m/s)	Tailwater Velocity (m/s)
0.15	0.15	411.90	0.362	0.0*	1-S2n	0.238	0.248	0.238	0.016	1.433	0.764
0.15	0.15	411.90	0.362	0.0*	1-S2n	0.238	0.248	0.238	0.016	1.433	0.764
0.15	0.15	411.90	0.362	0.0*	1-S2n	0.238	0.248	0.238	0.016	1.433	0.764
0.15	0.15	411.90	0.362	0.0*	1-S2n	0.238	0.248	0.238	0.016	1.433	0.764
0.15	0.15	411.90	0.362	0.0*	1-S2n	0.238	0.248	0.238	0.016	1.433	0.764
0.15	0.15	411.90	0.362	0.0*	1-S2n	0.238	0.248	0.238	0.016	1.433	0.764
0.15	0.15	411.90	0.362	0.0*	1-S2n	0.238	0.248	0.238	0.016	1.433	0.764
0.15	0.15	411.90	0.362	0.0*	1-S2n	0.238	0.248	0.238	0.016	1.433	0.764
0.15	0.15	411.90	0.362	0.0*	1-S2n	0.238	0.248	0.238	0.016	1.433	0.764
0.15	0.15	411.90	0.362	0.0*	1-S2n	0.238	0.248	0.238	0.016	1.433	0.764
0.15	0.15	411.90	0.362	0.0*	1-S2n	0.238	0.248	0.238	0.016	1.433	0.764

Site Data - D268B Proposed 600mm CMP

Site Data Option: Culvert Invert Data

Inlet Station: 0.00 m

Inlet Elevation: 413.02 m

Outlet Station: 29.30 m

Outlet Elevation: 410.76 m

Number of Barrels: 1

Culvert Data Summary - D268B Proposed 600mm CMP

Barrel Shape: Circular

Barrel Diameter: 600.00 mm

Barrel Material: Corrugated Steel

Embedment: 0.00 mm

Barrel Manning's n: 0.0240

Inlet Type: Conventional

Inlet Edge Condition: Mitered to Conform to Slope

Inlet Depression: None

Tailwater Channel Data - D268B - Sta. 5+424

Tailwater Channel Option: Trapezoidal Channel

Bottom Width: 5.10 m

Side Slope (H:V): 2.80 (_:1)

Channel Slope: 0.0550

Channel Manning's n: 0.0350

Channel Invert Elevation: 410.76 m

Roadway Data for Crossing: D268B - Sta. 5+424

Roadway Profile Shape: Constant Roadway Elevation

Crest Length: 4.50 m

Crest Elevation: 413.91 m

Roadway Surface: Paved

Roadway Top Width: 17.72 m

Table 5 - Summary of Culvert Flows at Crossing: D268B - Sta. 5+424

Headwater Elevation (m)	Total Discharge (cms)	D268B Proposed 600mm CMP Discharge (cms)	Roadway Discharge (cms)	Iterations
413.31	0.10	0.10	0.00	1
413.31	0.10	0.10	0.00	1
413.31	0.10	0.10	0.00	1
413.31	0.10	0.10	0.00	1
413.31	0.10	0.10	0.00	1
413.31	0.10	0.10	0.00	1
413.31	0.10	0.10	0.00	1
413.31	0.10	0.10	0.00	1
413.31	0.10	0.10	0.00	1
413.31	0.10	0.10	0.00	1
413.31	0.10	0.10	0.00	1
413.91	0.50	0.50	0.00	Overtopping

Table 6 - Culvert Summary Table: D268B Proposed 600mm CMP

Total Discharge (cms)	Culvert Discharge (cms)	Headwater Elevation (m)	Inlet Control Depth (m)	Outlet Control Depth (m)	Flow Type	Normal Depth (m)	Critical Depth (m)	Outlet Depth (m)	Tailwater Depth (m)	Outlet Velocity (m/s)	Tailwater Velocity (m/s)
0.10	0.10	413.31	0.288	0.0*	1-S2n	0.131	0.200	0.132	0.030	2.200	0.642
0.10	0.10	413.31	0.288	0.0*	1-S2n	0.131	0.200	0.132	0.030	2.200	0.642
0.10	0.10	413.31	0.288	0.0*	1-S2n	0.131	0.200	0.132	0.030	2.200	0.642
0.10	0.10	413.31	0.288	0.0*	1-S2n	0.131	0.200	0.132	0.030	2.200	0.642
0.10	0.10	413.31	0.288	0.0*	1-S2n	0.131	0.200	0.132	0.030	2.200	0.642
0.10	0.10	413.31	0.288	0.0*	1-S2n	0.131	0.200	0.132	0.030	2.200	0.642
0.10	0.10	413.31	0.288	0.0*	1-S2n	0.131	0.200	0.132	0.030	2.200	0.642
0.10	0.10	413.31	0.288	0.0*	1-S2n	0.131	0.200	0.132	0.030	2.200	0.642
0.10	0.10	413.31	0.288	0.0*	1-S2n	0.131	0.200	0.132	0.030	2.200	0.642
0.10	0.10	413.31	0.288	0.0*	1-S2n	0.131	0.200	0.132	0.030	2.200	0.642
0.10	0.10	413.31	0.288	0.0*	1-S2n	0.131	0.200	0.132	0.030	2.200	0.642

Site Data - D268C Proposed 600mm CMP

Site Data Option: Culvert Invert Data

Inlet Station: 0.00 m

Inlet Elevation: 405.95 m

Outlet Station: 22.60 m

Outlet Elevation: 404.50 m

Number of Barrels: 1

Culvert Data Summary - D268C Proposed 600mm CMP

Barrel Shape: Circular

Barrel Diameter: 600.00 mm

Barrel Material: Corrugated Steel

Embedment: 0.00 mm

Barrel Manning's n: 0.0240

Inlet Type: Conventional

Inlet Edge Condition: Mitered to Conform to Slope

Inlet Depression: None

Tailwater Channel Data - D268C - Sta. 5+568

Tailwater Channel Option: Trapezoidal Channel

Bottom Width: 10.10 m

Side Slope (H:V): 3.60 (_:1)

Channel Slope: 0.0430

Channel Manning's n: 0.0350

Channel Invert Elevation: 404.50 m

Roadway Data for Crossing: D268C - Sta. 5+568

Roadway Profile Shape: Constant Roadway Elevation

Crest Length: 7.00 m

Crest Elevation: 406.71 m

Roadway Surface: Paved

Roadway Top Width: 7.85 m

Table 7 - Summary of Culvert Flows at Crossing: D268C - Sta. 5+568

Headwater Elevation (m)	Total Discharge (cms)	D268C Proposed 600mm CMP Discharge (cms)	Roadway Discharge (cms)	Iterations
406.34	0.17	0.17	0.00	1
406.34	0.17	0.17	0.00	1
406.34	0.17	0.17	0.00	1
406.34	0.17	0.17	0.00	1
406.34	0.17	0.17	0.00	1
406.34	0.17	0.17	0.00	1
406.34	0.17	0.17	0.00	1
406.34	0.17	0.17	0.00	1
406.34	0.17	0.17	0.00	1
406.34	0.17	0.17	0.00	1
406.34	0.17	0.17	0.00	1
406.71	0.44	0.44	0.00	Overtopping

Table 8 - Culvert Summary Table: D268C Proposed 600mm CMP

Total Discharge (cms)	Culvert Discharge (cms)	Headwater Elevation (m)	Inlet Control Depth (m)	Outlet Control Depth (m)	Flow Type	Normal Depth (m)	Critical Depth (m)	Outlet Depth (m)	Tailwater Depth (m)	Outlet Velocity (m/s)	Tailwater Velocity (m/s)
0.17	0.17	406.34	0.388	0.0*	1-S2n	0.182	0.264	0.183	0.029	2.340	0.567
0.17	0.17	406.34	0.388	0.0*	1-S2n	0.182	0.264	0.183	0.029	2.340	0.567
0.17	0.17	406.34	0.388	0.0*	1-S2n	0.182	0.264	0.183	0.029	2.340	0.567
0.17	0.17	406.34	0.388	0.0*	1-S2n	0.182	0.264	0.183	0.029	2.340	0.567
0.17	0.17	406.34	0.388	0.0*	1-S2n	0.182	0.264	0.183	0.029	2.340	0.567
0.17	0.17	406.34	0.388	0.0*	1-S2n	0.182	0.264	0.183	0.029	2.340	0.567
0.17	0.17	406.34	0.388	0.0*	1-S2n	0.182	0.264	0.183	0.029	2.340	0.567
0.17	0.17	406.34	0.388	0.0*	1-S2n	0.182	0.264	0.183	0.029	2.340	0.567
0.17	0.17	406.34	0.388	0.0*	1-S2n	0.182	0.264	0.183	0.029	2.340	0.567
0.17	0.17	406.34	0.388	0.0*	1-S2n	0.182	0.264	0.183	0.029	2.340	0.567
0.17	0.17	406.34	0.388	0.0*	1-S2n	0.182	0.264	0.183	0.029	2.340	0.567

Site Data - D268D Proposed 600mm CMP

Site Data Option: Culvert Invert Data

Inlet Station: 0.00 m

Inlet Elevation: 396.66 m

Outlet Station: 13.20 m

Outlet Elevation: 396.59 m

Number of Barrels: 1

Culvert Data Summary - D268D Proposed 600mm CMP

Barrel Shape: Circular

Barrel Diameter: 600.00 mm

Barrel Material: Corrugated Steel

Embedment: 0.00 mm

Barrel Manning's n: 0.0240

Inlet Type: Conventional

Inlet Edge Condition: Mitered to Conform to Slope

Inlet Depression: None

Tailwater Channel Data - D268D - Sta. 5+904

Tailwater Channel Option: Trapezoidal Channel

Bottom Width: 9.10 m

Side Slope (H:V): 3.10 (_:1)

Channel Slope: 0.0705

Channel Manning's n: 0.0350

Channel Invert Elevation: 396.59 m

Roadway Data for Crossing: D268D - Sta. 5+904

Roadway Profile Shape: Constant Roadway Elevation

Crest Length: 30.00 m

Crest Elevation: 397.85 m

Roadway Surface: Paved

Roadway Top Width: 8.62 m

Table 9 - Summary of Culvert Flows at Crossing: D268D - Sta. 5+904

Headwater Elevation (m)	Total Discharge (cms)	D268D Proposed 600mm CMP Discharge (cms)	Roadway Discharge (cms)	Iterations
397.11	0.18	0.18	0.00	1
397.11	0.18	0.18	0.00	1
397.11	0.18	0.18	0.00	1
397.11	0.18	0.18	0.00	1
397.11	0.18	0.18	0.00	1
397.11	0.18	0.18	0.00	1
397.11	0.18	0.18	0.00	1
397.11	0.18	0.18	0.00	1
397.11	0.18	0.18	0.00	1
397.11	0.18	0.18	0.00	1
397.11	0.18	0.18	0.00	1
397.85	0.56	0.56	0.00	Overtopping

Table 10 - Culvert Summary Table: D268D Proposed 600mm CMP

Total Discharge (cms)	Culvert Discharge (cms)	Headwater Elevation (m)	Inlet Control Depth (m)	Outlet Control Depth (m)	Flow Type	Normal Depth (m)	Critical Depth (m)	Outlet Depth (m)	Tailwater Depth (m)	Outlet Velocity (m/s)	Tailwater Velocity (m/s)
0.18	0.18	397.11	0.401	0.450	2-M2c	0.385	0.272	0.273	0.028	1.435	0.701
0.18	0.18	397.11	0.401	0.450	2-M2c	0.385	0.272	0.273	0.028	1.435	0.701
0.18	0.18	397.11	0.401	0.450	2-M2c	0.385	0.272	0.273	0.028	1.435	0.701
0.18	0.18	397.11	0.401	0.450	2-M2c	0.385	0.272	0.273	0.028	1.435	0.701
0.18	0.18	397.11	0.401	0.450	2-M2c	0.385	0.272	0.273	0.028	1.435	0.701
0.18	0.18	397.11	0.401	0.450	2-M2c	0.385	0.272	0.273	0.028	1.435	0.701
0.18	0.18	397.11	0.401	0.450	2-M2c	0.385	0.272	0.273	0.028	1.435	0.701
0.18	0.18	397.11	0.401	0.450	2-M2c	0.385	0.272	0.273	0.028	1.435	0.701
0.18	0.18	397.11	0.401	0.450	2-M2c	0.385	0.272	0.273	0.028	1.435	0.701
0.18	0.18	397.11	0.401	0.450	2-M2c	0.385	0.272	0.273	0.028	1.435	0.701
0.18	0.18	397.11	0.401	0.450	2-M2c	0.385	0.272	0.273	0.028	1.435	0.701

APPENDIX E

LOW WATER CROSSING TRACTIVE FORCE – RIPRAP PROTECTION CALCULATION

Project: Nevada Project Pra-Lame 112 (1) : Echo Bay Access Road	Project No	31510E
	Prepared by	M. Tilko
	Date	2/10/2010
Title: Low Water Crossing Riprap Protection Cacluatior	Verified by	C. Haggerty
Low Water Crossing D260	Date	2/11/2010

Spreadsheet for Tractive Force Method
Hydraulic Engineering Circular No. 15, Thrid Edition
Design of Roadside Channels with Flexible Linings

Tractive Force Exerted

$$\tau_d = \gamma\, d S_o \qquad \text{(Equation 2.4)}$$

Where:

τ_d =	N/m^2	Tractive Force (Shear Stress in Channel at Maximum Depth), N/m^2
γ =	N/m^3	Unit Weight of Water, 9810 N/m^3
d =	m	Maximum Depth of Flow in the Channel for the Design Discharge, m
S_o =	m/m	Average Bottom Slope (Equal to Energy Slope for Uniform Flow), m/m

Given: (Trapezoidal Channel)

z =	10	m	Channel Sideslope
d =	0.5	m	Channel Depth
b =	7.0	m	Channel Bottom Width
A =	6.00	m^2	Flow Area of Channel
γ =	9.81	kN/m^3	
S =	0.0200	m/m	Channel Longitudinal Gradient

Calculated:

τ_d =	0.10	kN/m^2

Permissible Shear Stress: (Reference Table 2.3 for Typical Permissible Shear Stresses of Bare Soil and Stone Linings)

$$\tau_p = F.(\gamma_s - \gamma) D_{50} \qquad \text{(Equation 6.7)}$$

Where:

τ_p =	N/m^2	Permissible Shear Stress
F* =		Shield's Parameter, Dimenionless
γ_s =	N/m^3	Specific Weight of the Stone
γ =	N/m^3	Specific Weight of the Water
D_{50} =	m	Mean Riprap Size

Given:

F* =	0.05	
γ_s =	25.9	kN/m^3
γ =	9.81	kN/m^3
D_{50} =	0.25	m

Calculated:

τ_p =	0.19	kN/m^2

Therefore the Lining is: **Stable with Specified Riprap**

Table - Riprap Classes

Class	D_{50} (mm)
1	125
2	150
3	250
4	350
5	500
6	550

Table 2.3. Typical Permissible Shear Stresses for Bare Soil and Stone Linings

Lining Category	Lining Type	Permissible Shear Stress N/m^2	Permissible Shear Stress lb/ft^2
Bare Soil[1] Cohesive (PI = 10)	Clayey sands	1.8-4.5	0.037-0.095
	Inorganic silts	1.1-4.0	0.027-0.11
	Silty sands	1.1-3.4	0.024-0.072
Bare Soil[1] Cohesive (PI $\geq$ 20)	Clayey sands	4.5	0.094
	Inorganic silts	4.0	0.083
	Silty sands	3.5	0.072
	Inorganic clays	6.6	0.14
Bare Soil[2] Non-cohesive (PI < 10)	Finer than coarse sand D_{75}<1.3 mm (0.05 in)	1.0	0.02
	Fine gravel D_{75}=7.5 mm (0.3 in)	5.6	0.12
	Gravel D_{75}=15 mm (0.6 in)	11	0.24
Gravel Mulch[3]	Coarse gravel D_{50} = 25 mm (1 in)	19	0.4
	Very coarse gravel D_{50} = 50 mm (2 in)	38	0.8
Rock Riprap[3]	D_{50} = 0.15 m (0.5 ft)	113	2.4
	D_{50} = 0.30 m (1.0 ft)	227	4.8

[1]Based on Equation 4.6 assuming a soil void ratio of 0.5 (USDA, 1987).
[2]Based on Equation 4.5 derived from USDA (1987)
[3]Based on Equation 6.7 with Shield's parameter equal to 0.047.

* HEC 15 - Design of Roadside Channels with Flexible Linings
Chapter 2: Design Concepts, pg 2-7

APPENDIX F

GRATE INLET CAPACITY CALCULATION

Project: Nevada Project Pra-Lame 112 (1) :	Project No	31510E
Echo Bay Marina Access Road	Prepared by	M. Tilko
	Date	2/10/2010
	Verified by	C. Haggerty
Title: Grate Inlet Capacity Calculation	Date	2/11/2010

Spreadsheet for Capacity of a Grate Inlet
Hydraulic Engineering Circular No.22, Thrid Edition
Urban Drainage Design Manual

Inlet Characteristics (Reference Detail Inlet Type 6B, Standard M604-7)

Basin ID: D263

Given:	Section B-B	
Opening (Section B-B):	0.279	m
Given:	Metal Frames and Gratings Section Type 6B	
Total Length:	0.768	m
Closed Areas:	0.075	m
	0.064	m
	0.266	m
Total:	0.045	m
Total Inlet Open Area (Entire Grate):	0.203	m^2
Clogging Factor	30	%
Reduced Open Area	0.142	m^2

Capacity of Grate Inlet Operating as an Orifice

$Q_i = C_o A_g (2 g d)^{0.5}$ (Equation 4-27, HEC-22)

$d = (Q/C_o A_g)^2/2g$

Given:			
Qi =	0.060	m^3/s	Design Discharge
C_o =	0.67		Orifice Coefficient
A_g =	0.142	m^2	Clear Opening Area of the Grate w/ clogging
g =	9.81	m/s^2	Gravitional Acceralation
Calculated:			
d_1, d_2 =	0.020	m	
d =	0.020	m	Average Depth Across the Grate

Capacity of Grate Inlet Operating as a Weir

$Q_i = C_w P d^{1.5}$ (Equation 4-26, HEC-22)

$d = (Q/(C_w P))^{2/3}$

Cw =	1.660	1.66 (3.0 for English Units)	Cw =	1.660	1.66 (3.0 for English Units)
P =	4.46	= 0.279m x 16 grate openings	P =	2.90	= 0.724m x 4 walls
d =	0.040	m	d =	0.054	m

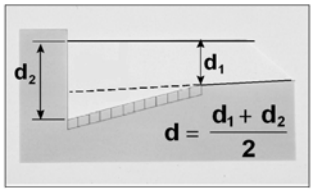

Figure 4-17. Definition of depth.

* U.S. Department of Transportation Federal Highway Adminstration
Grate Inlets in Sags, Pg. 4+57

Project: Nevada Project Pra-Lame 112 (1) :
Echo Bay Marina Access Road

Title: Inlet Type 6B, Standard M604-7 Detail

Project No	31510E
Prepared by	M. Tilko
Date	12/29/2009
Verified by	C. Haggerty
Date	2/2/2010

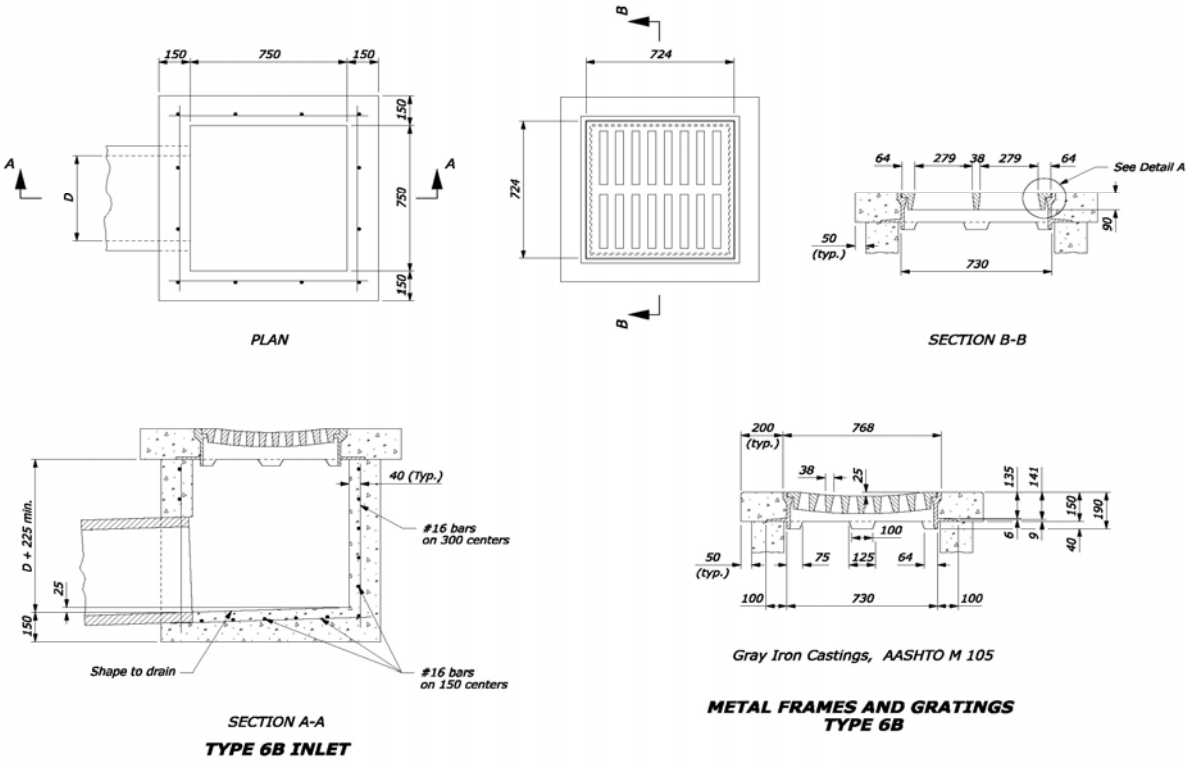

* U.S. Department of Transportation Federal Highway Adminstration - Federal Lands Highway
Inlet Type 6B, Standard M604-7